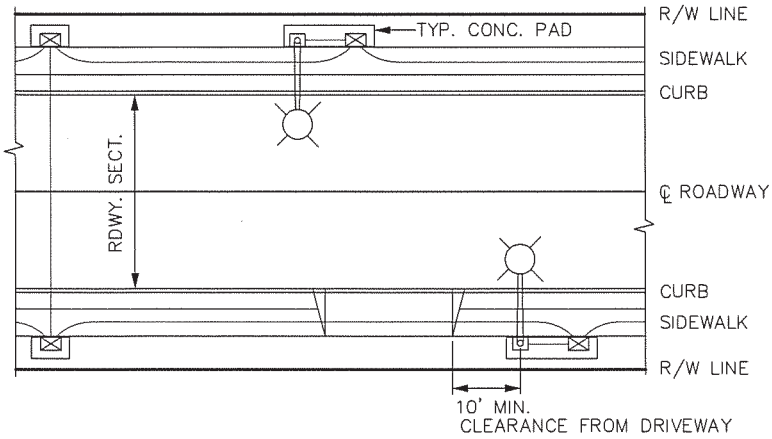

ALTERNATE PLAN VIEW

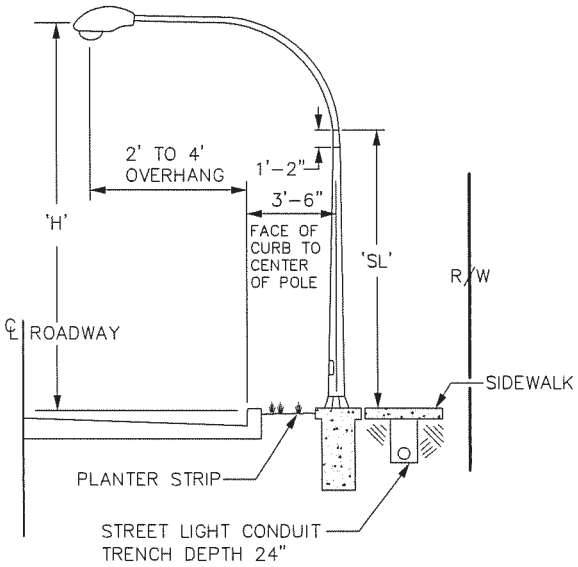

TYPICAL STREET LIGHT FOUNDATION LOCATION

H	25'	30'	35'	40'
SL	18'-3"	23'-3"	28'-3"	33'-3"
T	0.188	0.188	0.219	0.219

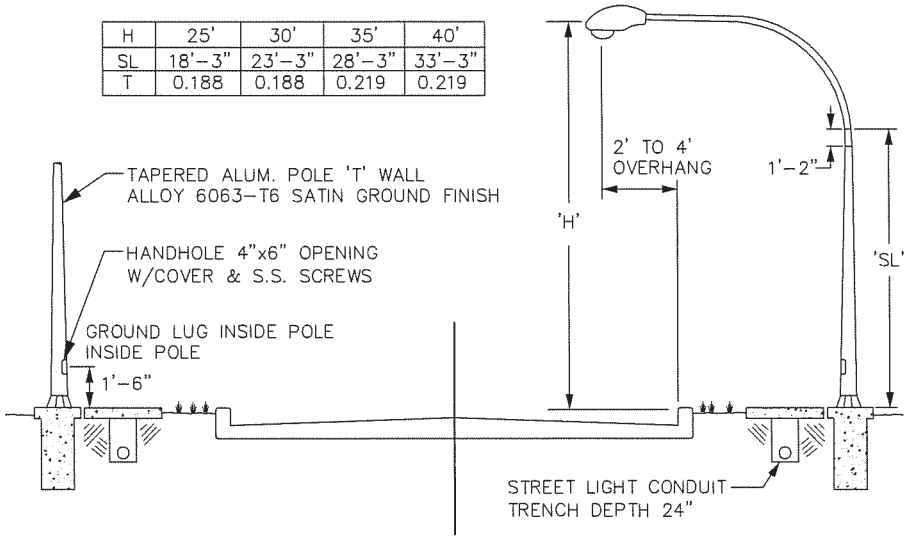

ALTERNATE STREET CROSS SECTION

CITY OF RENTON PUBLIC WORKS DEPARTMENT	**LIGHT BASE AND JUNCTION BOX LOCATION**	**STD. PLAN – 124** APPROVED: Doug Zimmerman 6/11/12 DATE