APPENDIX D

CONSTRUCTION STORMWATER POLLUTION PREVENTION (CSWPP) STANDARDS

EROSION AND SEDIMENT CONTROL (ESC) STANDARDS

STORMWATER POLLUTION PREVENTION AND SPILL CONTROL (SWPPS) STANDARDS

CITY OF RENTON

SURFACE WATER DESIGN MANUAL

DRAFT
December 1, 2016

DRAFT

DRAFT

APPENDIX D

CONSTRUCTION STORMWATER POLLUTION PREVENTION STANDARDS

CITY OF RENTON

SURFACE WATER DESIGN MANUAL

DRAFT

Section		Page
D.1	**Principles of Construction Stormwater Pollution Prevention (CSWPP)**	**D-5**
D.1.1	Erosion and Sediment Control Principles	D-5
D.1.2	Stormwater Pollution Prevention and Spill Control Principles	D-7
D.2	**General CSWPP Requirements**	**D-9**
D.2.1	ESC Measures	D-10
D.2.1.1	Clearing Limits	D-11
D.2.1.2	Cover Measures	D-12
D.2.1.3	Perimeter Protection	D-33
D.2.1.4	Traffic Area Stabilization	D-42
D.2.1.5	Sediment Retention	D-48
D.2.1.6	Surface Water Collection	D-60
D.2.1.7	Dewatering Control	D-69
D.2.1.8	Dust Control	D-69
D.2.1.9	Flow Control	D-72
D.2.1.10	Protect Existing and Proposed Stormwater Facilitles and On-site BMPs	D-72
D.2.1.11	Maintain Protective BMPs	D-73
D.2.1.12	Manage the Project	D-73
D.2.2	SWPPS Measures	D-74
D.2.2.1	Concrete Handling	D-75
D.2.2.2	Concrete Washout Area	D-76
D.2.2.3	Sawcutting and Surfacing Pollution Prevention	D-81
D.2.2.4	Material Delivery, Storage, and Containment	D-81
D.2.2.5	Construction Stormwater Chemical Treatment	D-83
D.2.2.6	Construction Stormwater Filtration	D-89
D.2.2.7	High pH Neutralization Using CO_2	D-92
D.2.2.8	pH Control for High pH Water	D-94
D.2.2.9	Use of High pH Soil Amendments on Construction Sites	D-95
D.2.2.10	Maintain Protective BMPs	D-103
D.2.2.11	Manage the Project	D-103
D.2.3	CSWPP Performance and Compliance Provisions	D-104
D.2.3.1	CSWPP Supervisor	D-104
D.2.3.2	Monitoring of Discharges	D-105
D.2.3.3	ESC Performance	D-105
D.2.3.4	SWPPS Performance	D-106
D.2.3.5	Flexible Compliance	D-106
D.2.3.6	Roads and Utilities Compliance	D-106
D.2.3.7	Alternative Measures	D-107

D.2.4	CSWPP Implementation Requirements	D-108
D.2.4.1	CSWPP Plan	D-108
D.2.4.2	Wet Season Requirements	D-108
D.2.4.3	Critical Areas Restrictions	D-109
D.2.4.4	Maintenance Requirements	D-110
D.2.4.5	Final Stabilization	D-111
D.2.4.6	NPDES Requirements	D-111
D.2.4.7	Forest Practice Permit Requirements	D-112
D.2.5	Construction Stormwater Pollution Prevention Plans	D-112
D.2.5.1	ESC Plan	D-112
D.2.5.2	SWPPS Plan	D-115
D.3	**Small Site CSWPP**	**D-121**
D.3.1	Introduction to Small Site CSWPP	D-121
D.3.2	Small Site CSWPP Requirements	D-122
D.3.3	Small Site CSWPP Implementation Requirements	D-124
D.3.4	ESC Measures Modified for Small Sites	D-124
D.3.4.1	Mark Clearing Limits/Minimize Clearing	D-124
D.3.4.2	Ditches	D-125
D.3.4.3	Pipe Slope Drain	D-126
D.3.5	Control of Other Pollutants (SWPPS)	D-126
D.3.6	Small Site CSWPP Submittal Requirements	D-128
D.3.6.1	Small Site CSWPP Plan Map	D-128
D.3.6.2	Features Required on Small Site CSWPP Plans	D-128
D.3.6.3	Sample Small Site CSWPP Plan	D-129
D.4	**Reference Section**	**D-133**
D.4.1	Standard ESC Plan Notes	D-133
D.4.2	Recommended Construction Sequence	D-133
D.4.3	ESC and SWPPS Maintenance Reports	D-134

DRAFT

APPENDIX D

CONSTRUCTION STORMWATER POLLUTION PREVENTION STANDARDS

EROSION AND SEDIMENT CONTROL (ESC) STORMWATER POLLUTION PREVENTION AND SPILL CONTROL (SWPPS)

Construction sites have a potential to pollute stormwater by sediment erosion and by ineffective management of onsite construction-related activities and materials storage. The Construction Stormwater Pollution Prevention (CSWPP) Plan is comprised of the Erosion and Sediment Control (ESC) Plan to address erosion and sediment control requirements, and the Stormwater Pollution Prevention and Spill Control (SWPPS) Plan to aid effective management of onsite activities and materials.

EROSION AND SEDIMENT CONTROL (ESC)

The purpose of ESC is to prevent to the maximum extent practicable,[1] the transport of sediment to streams, wetlands, lakes, drainage systems, and adjacent properties during and following construction of a proposed project or other *land disturbing activity*.[2] In many circumstances it is difficult to completely prevent the transport of sediment to these features, either because of the difficulty in removing silt and clay-sized particles from runoff or because of large, infrequent storms that overwhelm the ESC facilities. It is the responsibility of those involved in the design and construction of any project to utilize a variety of strategies to minimize erosion and the transport of sediment to the maximum extent practicable. These strategies shall include overall project planning that reduces the risk of erosion through appropriate design and scheduling (see Section D.1) and traditional structural and cover measures, such as those described in Section D.2.1.

Erosion and sediment control is necessary because erosion rates associated with uncontrolled construction sites are much higher than normal rates—often a thousand or more times that of undeveloped land. The erosion rates increase during construction due to the removal of soil cover, alteration of soil characteristics, and changes in site topography. These vastly accelerated erosion rates, together with the higher rates typical of urbanized areas, result in excessive deposition of sediment in water resources and drainage facilities. This excessive erosion and consequent sediment deposition can result in devastating

[1] *Maximum extent practicable* means the use of best management practices that are available and capable of being designed, constructed and implemented in a reliable and effective manner including, but not limited to, consideration of site conditions and cost.

[2] *Land disturbing activity* means any activity that results in a change in the existing soil cover (both vegetative and non-vegetative and/or the existing soil topography. Land disturbing activities include, but are not limited to demolition, construction, clearing, grading, filling, excavation, and compaction. Land disturbing activity does not include tilling conducted as part of agricultural practices, landscape maintenance, or gardening.

DRAFT

impacts to surface waters such as smothering of salmonid spawning beds, algal blooms in lakes, and flooding due to obstruction of drainage ways.

Applying erosion and sediment controls to construction sites can greatly reduce the delivery of sediment to surface waters. The chart on the next page shows how controls can significantly reduce the concentration of sediment leaving the project site.[3] Even with good controls, the concentration of sediment leaving the site will still be significantly higher than either undeveloped or developed conditions and this may result in significant adverse impacts; however, the likelihood of such impacts are dramatically less than if no controls are used.

STORMWATER POLLUTION PREVENTION AND SPILL CONTROL (SWPPS)

The purpose of stormwater pollution prevention and spill control is to prevent, reduce, or eliminate the discharge of pollutants to onsite or adjacent stormwater systems or watercourses from construction-related activities such as materials delivery and storage, onsite equipment fueling and maintenance, demolition of existing buildings and disposition of demolition materials and other waste, and concrete handling, washout and disposal.

Construction activities usually necessitate the onsite storage of earth-moving vehicles and provision for parking for contractors and employees. Parking and typical fueling and maintenance can result in fuel spills and dripping vehicular fluids. Construction practices often involve the use and storage of materials such as soil treatments, flocculant chemicals, toxic solvents and building materials, and caustic concrete materials that could cause negative impacts if allowed to leak, drip or otherwise escape into surface and ground waters or become airborne. Concrete delivery, preparation, handling and disposal occur on most construction sites. The resultant high pH concrete wastewater from placement and washout operations can be toxic to aquatic resources and groundwater if left uncaptured or untreated or improperly disposed,

It is the responsibility of those involved in the design and construction of any project to utilize a variety of strategies to prevent pollutants from entering stormwater runoff. These strategies shall include overall project planning that reduces the risk of pollution through appropriate site management and project scheduling (see Section D.1.1) and structural, cover, containment and handling measures, such as those described in Section D.2.2.

Compliance with Surface Water Quality Requirements RMC 4-6-030

The City of Renton Surface Water Design Manual (SWDM), (including this Appendix D, Construction Stormwater Pollution Prevention Standards) and the King County Stormwater Pollution Prevention Manual (SPPM) collectively address the surface water quality requirements of the City of Renton Municipal Code (RMC) 4-6-030. While the SWDM addresses impacts from construction, the SPPM spans construction and post-construction time frames. For full compliance with RMC 4-6-030, the applicant must address the requirements of the SPPM, which may include permanent structural elements requiring separate permit review.

Organization of Appendix D

Appendix D is organized as follows:

- Section D.1, “Principles of Construction Stormwater Pollution Prevention (CSWPP)”
- Section D.2, “General CSWPP Requirements”
- Section D.3, “Small Site CSWPP”
- Section D.4, “Reference Section”

[3] *Project site* means that portion of a site and any offsite areas subject to proposed project activities, alterations, and improvements. *Site* means a single parcel, or two or more contiguous parcels that are under common ownership or documented legal control, used as a single parcel for purposes of applying for authority from the City of Renton to carry out a development/project proposal. For projects located primarily within dedicated rights-of-way, site includes the entire width of right-of-way within the total length of right-of-way subject to improvements proposed by the project.

DRAFT

MEDIAN STORM SEDIMENT CONCENTRATIONS (METROPOLITAN WASHINGTON COUNCIL OF GOVERNMENTS, 1990)

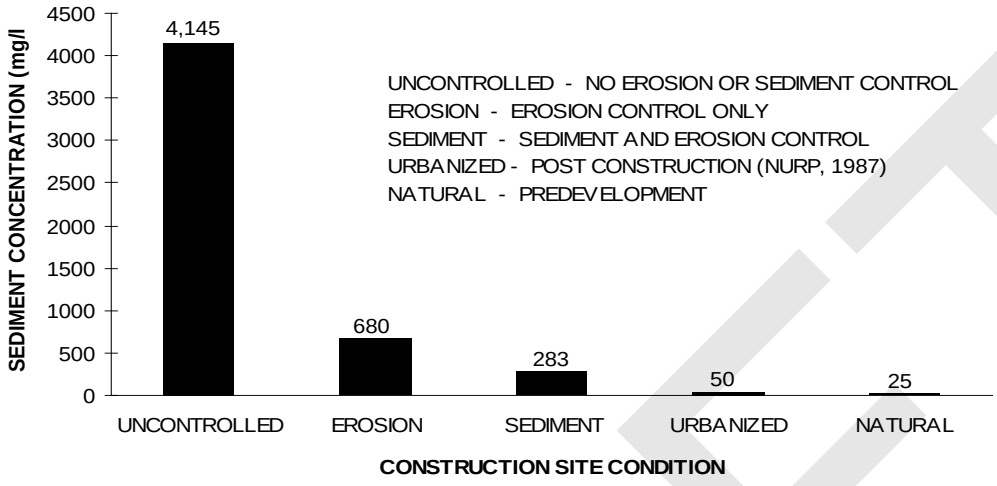

DRAFT

(This page intentionally left blank)

DRAFT

D.1 PRINCIPLES OF CONSTRUCTION STORMWATER POLLUTION PREVENTION (CSWPP)

D.1.1 EROSION AND SEDIMENT CONTROL PRINCIPLES

This section provides basic information on the principles of erosion and sediment control that shall be applied to all projects in the City of Renton. This section is intended to highlight certain principles that are particularly critical to achieving effective control and that are the basis for the erosion and sediment control requirements of the *SWDM's* Core Requirement #5: Construction Stormwater Pollution Prevention. Projects that are consistent with these principles will generally meet the intent of the ESC aspects of Core Requirement #5 and this appendix, even if the details of the project are not entirely consistent with City standards. If a more complete treatment of ESC is needed, there are a number of useful references available (for example, *Erosion and Sediment Control Handbook*, Goldman et al., 1986). Additionally, information on permanent erosion control in natural channels is available in the *Guidelines for Bank Stabilization Projects* (King County, 1993).

- **Design the project to fit the natural topography, soils, and drainage patterns.** Through such practices as limiting disturbance of steeper slopes, avoiding disturbance of natural drainage ways, or using soils with a high infiltration rate to treat polluted runoff, the characteristics of the site can be used to minimize erosion and sediment transport.
- **Emphasize erosion control rather than sediment control.** Erosion control minimizes the entrainment of sediment by runoff or in the air due to wind, while sediment control removes entrained sediment from runoff. Erosion control is more efficient and cost-effective because it is nearly impossible to entirely remove sediment from runoff once it is entrained. Examples of erosion control include covering disturbed soils and controlling surface runoff using measures such as dikes and lined ditches. One illustration of the relative effectiveness of erosion control is straw mulch, which can reduce sediment concentrations in runoff over 90%.

  Since it is nearly impossible to entirely prevent erosion, it will also be necessary to incorporate sediment control facilities such as sedimentation ponds and silt fences. Sediment controls vary in their effectiveness, but typically reduce sediment concentrations 50 to 75%. However, sediment controls have little effect on the very fine sediment that causes turbidity, whereas cover measures, such as straw mulch, can be highly effective in reducing turbidity.

- **Minimize the extent and duration of area exposed.** Restricting clearing to only those areas necessary for construction is probably the single most effective form of erosion control. Additionally, exposing areas only as long as necessary reduces the risk of erosion substantially. This can be accomplished by planning the project so that areas are disturbed only when construction is imminent, and by mulching or seeding disturbed areas as soon as grading is completed.
- **Keep runoff velocities low.** While erosion of exposed soil begins with a single raindrop or the wind, the largest volumes of eroded materials are typically associated with concentrated runoff forming rills and gullies. One of the best ways to minimize erosion, therefore, is to reduce the possibility of concentrated runoff by intercepting runoff and conveying it in a non-erosive manner to a sediment pond or trap. This can include the use of dikes, swales, and benches to intercept runoff on slopes and ditches or drains to convey the intercepted runoff.
- **Retain sediment on site.** Sediment retention is less effective than erosion control measures, such as cover, but it is nevertheless a vital part of most projects because it is impossible to completely prevent erosion and the entrainment of sediment by runoff. Sediment can be retained by allowing it to settle out in ponds and traps or by filtering runoff from small areas through vegetation or use of a silt fence. Note that settling and filtration typically only remove sand-sized and coarse silt particles. Fine silts and clays cannot be removed in these ways unless the runoff is released to vegetated areas, or unless chemical treatment (e.g., with alum or chitosan introduction) or electroflocculation are used.

DRAFT

- **Protect all existing and proposed Low Impact Development (LID) on-site BMPs from sedimentation and compaction during construction.** On-site BMPs rely on infiltration into the native soils onsite. Sedimentation can clog and compaction can reduce the void space in the soil, lessening the soil's ability to infiltrate. Effective ESC measures can protect existing stormwater facilities and on-site BMPs from sedimentation and intrusion by construction activities, while assuring the areas planned for new BMPs/facilities retain their infiltrative capacity
- **Thoroughly monitor the site and maintain all ESC measures.** Maintenance and vigilance are the most vital components of effective ESC management. All measures require regular maintenance, monitoring and inspection. The overall site also needs to be constantly examined to ensure that all areas are protected, that the measures are working together to provide maximum protection, and that all areas are mulched and/or vegetated as soon as possible.
- **Schedule major earthwork during the dry season.** The climate in the Puget Sound region is unique in that there are generally well-defined wet and dry seasons (see Figure D.1.1.A) and the *wet season*[4] is characterized by a large number of low-intensity, but frequent and long-lasting, storms. As a result, construction in the dry season[5] is a very effective form of erosion control. If construction does occur in the wet season, the need for regular maintenance is even more imperative.

FIGURE D.1.1.A YEARLY RAINFALL PATTERN

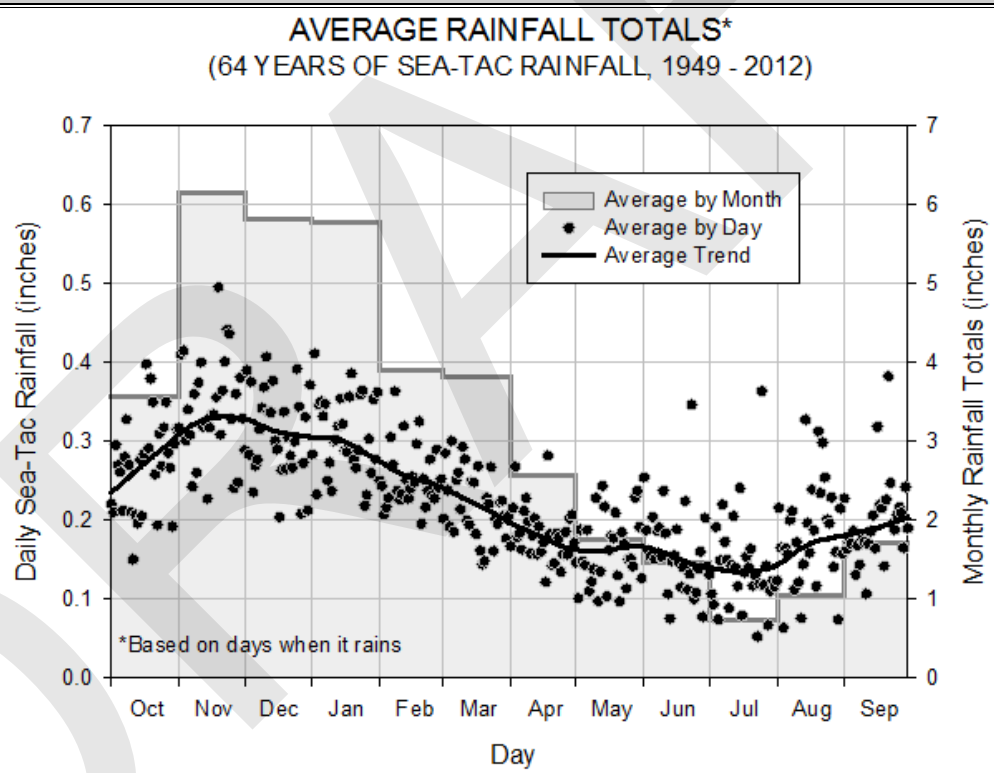

[4] *Wet season* means October 1 to April 30.

[5] *Dry season* means May 1 to September 30.

D.1.2 STORMWATER POLLUTION PREVENTION AND SPILL CONTROL PRINCIPLES

This section provides basic information on the principles of stormwater pollution prevention and control that shall be applied to all projects in the City of Renton. This section is intended to highlight certain principles that commonly apply to construction sites and are particularly critical to achieving effective control. These principles are the basis for the stormwater pollution prevention and spill control requirements of the *SWDM's* Core Requirement #5: Construction Stormwater Pollution Prevention. Projects that are consistent with these principles will generally meet the intent of the SWPPS aspects of Core Requirement #5 and this appendix, even if the details of the project are not entirely consistent with City standards. Additional information and BMP options other than those listed below can be found in the King County *Stormwater Pollution Prevention Manual (SPPM)*.

- **Follow effective pollutant handling and disposal procedures.** Conduct handling and disposal of all pollutants that occur onsite, including waste materials, in a manner that does not cause contamination of stormwater. Ensure employees are following handling and waste protocols.
- **Provide cover and containment for materials, fuel and other pollutants.** Cover, contain and protect from vandalism all chemicals, liquid products, petroleum products, and non-inert wastes present on the site (see Chapter 173-304 WAC for the definition of inert waste). Provide secondary containment for onsite fueling tanks and as required for other materials.
- **Manage the project site to maximize pollutant control and minimize pollutant sources.** Limit onsite parking for construction equipment and contractor vehicles to a designated and controllable area. Provide drip pans for fueling operations and disallow onsite parking for leaky vehicles. Schedule construction and maintenance operations to avoid exposing pollutant sources to inclement weather. Anticipate and prepare traffic routes through the site and limit traffic to those locations.
- **Protect from spills and drips of petroleum products and other pollutants**. Limit maintenance and repair of heavy equipment and vehicles to minor maintenance and fueling as much as possible. If conducting maintenance or repair involving oil changes, hydraulic system drain down, solvent and de-greasing cleaning operations, fuel tank drain down and removal, and other activities that may result in discharge or spillage of pollutants to the ground or into stormwater runoff, provide spill prevention measures, such as drip pans and temporary plastic sheet placed beneath the vehicle. Clean contaminated surfaces immediately following any discharge or spill incident.
- **Avoid overapplication or untimely application of chemicals and fertilizers.** Apply agricultural chemicals, including fertilizers and pesticides, in a manner and at application rates that will not result in loss of chemical to stormwater runoff. Plan ahead to avoid application prior to or during inclement weather.
- **Prevent or treat contamination of stormwater runoff by pH modifying sources.** These sources include, but are not limited to, bulk cement, cement kiln dust, fly ash, new concrete washing and curing waters, waste streams generated from concrete grinding and sawing, exposed aggregate processes, and concrete pumping and mixer washout waters. Stormwater discharges shall not cause or contribute to a violation of the water quality standard for pH in the receiving water.

DRAFT

(This page intentionally left blank)

DRAFT

D.2 GENERAL CSWPP REQUIREMENTS

To satisfy the City of Renton's requirements for CSWPP, the following steps are required of all construction projects:

1. **Design the plan:** In accordance with Sections 2.3.1 and 2.3.3 of the *SWDM*, prepare and submit a technical information report (TIR) and a CSWPP plan (comprised of the ESC plan and the SWPPS plan) for City review. Utilize the standards and details for ESC (Section D.2.1) and SWPPS control (Section D.2.2) of this appendix. Incorporate any City of Renton review comments as necessary to comply with Core Requirement #5, Section 1.2.5 of the *SWDM*, the Erosion and Sediment Control and Stormwater Pollution Prevention and Spill Control Standards in this appendix.
2. **Construct the approved plan:** Construct initial ESC, SWPPS and stormwater facility (flow control facility, runoff treatment facility, and on-site BMP) protection measures on site according to the approved CSWPP plan.
3. **Maintain the BMPs:** Inspect and maintain all CSWPP measures and stormwater facility (flow control facility, runoff treatment facility, and on-site BMP) protection throughout construction in accordance with the inspection and maintenance standards of Section D.2.4.4. Keep current any required documentation and reporting.
4. **Manage the project:** Make any changes or additions necessary during construction to ensure that CSWPP measures and stormwater facility (flow control facility, runoff treatment facility, and on-site BMP) protection perform in accordance with Core Requirement #5 and Sections D.2.1, D.2.2 and D.2.4. Coordinate construction in consideration of the applied BMP strategies. Ensure pollutant controls, facility processes and reporting requirements are met in accordance with Section D.2.3. The CSWPP supervisor is the primary point of contact for all ESC and SWPPP issues (see Section D.2.3.1).
5. **Conclude the plan:** Prior to final construction approval, meet all the conditions in Section D.2.4.5 for final stabilization.

A National Pollutant Discharge Elimination System (NPDES) General Permit for Construction (pursuant to the Washington State Department of Ecology's Construction Stormwater General Permit) may also be required for projects that will disturb one or more acres (see *SWDM* Section 1.2.5.3 for additional information). Proposed projects subject to Simplified Drainage Review as determined in SWDM Section 1.1.2.1 may satisfy City of Renton CSWPP requirements by meeting the Small Site CSWPP requirements specified in Section D.3 and reiterated in Appendix C of the *SWDM* titled, "Simplified Drainage Requirements."

DRAFT

D.2.1 ESC MEASURES

This section details the ESC measures that are required to minimize erosion and sediment transport off a construction site and protect areas of existing and proposed stormwater facilities (flow control facilities, runoff treatment facilities, and on-site BMPs). These ESC measures represent Best Management Practices (BMPs)[6] for the control of erosion and entrained sediment as well as other impacts related to construction such as increased runoff due to land disturbing activities. The measures and practices are grouped into nine sections corresponding to each of the nine categories of ESC measures in Core Requirement #5, Section 1.2.5 of the *SWDM*. The introductory paragraphs at the beginning each section present the basic requirement for that category of measures, the purpose of those measures, installation requirements relative to construction activity, guidelines for the conditions of use, and other information relevant to all measures in the section/category. Compliance with each of the nine categories of the ESC measures, to the extent applicable and necessary to meet the performance criteria in Section D.2.1, and compliance with the ESC implementation requirements in Section D.2.4, constitutes overall compliance with the City's ESC Standards.

Note: Additional measures shall be required by the City if the existing standards are insufficient to protect adjacent properties, drainage facilities, or water resources.

The standards for each individual ESC measure are divided into four sections:

1. Purpose
2. Conditions of Use
3. Design and Installation Specifications
4. Maintenance Requirements.

A code and symbol for each measure have also been included for ease of use on ESC plans. Note that the "Conditions of Use" always refers to site conditions. As site conditions change, ESC measures must be changed to remain in compliance with the requirements of this appendix.

Whenever compliance with the City's ESC Standards is required, all of the following categories of ESC measures must be considered for application to the project site as detailed in the following sections:

1. **Clearing Limits:** Prior to any site clearing or grading, areas to remain undisturbed during project construction shall be delineated on the project's ESC plan and physically marked on the project site.
2. **Cover Measures:** Temporary and permanent cover measures shall be provided when necessary to protect disturbed areas. The intent of these measures is to prevent erosion by having as much area as possible covered during any period of precipitation.
3. **Perimeter Protection:** Perimeter protection to filter sediment from sheet flow shall be provided downstream of **all** disturbed areas prior to upslope grading.
4. **Traffic Area Stabilization:** Unsurfaced entrances, roads, and parking areas used by construction traffic shall be stabilized to minimize erosion and tracking of sediment offsite.
5. **Sediment Retention:** Surface water collected from all disturbed areas of the site shall be routed through a sediment pond or trap prior to release from the site, except those areas at the perimeter of the site small enough to be treated solely with perimeter protection. Sediment retention facilities shall be installed prior to grading any contributing area.
6. **Surface Water Collection:** Surface water collection measures (e.g., ditches, berms, etc.) shall be installed to intercept all surface water from disturbed areas, convey it to a sediment pond or trap, and discharge it downstream of any disturbed areas. Areas at the perimeter of the site, which are small enough to be treated solely with perimeter protection, do not require surface water collection.

[6] *Best Management Practices (BMPs)* means the best available and reasonable physical, structural, managerial, or behavioral activities, that when singly or in combination, eliminate or reduce the contamination of surface and/or ground waters.

DRAFT

Significant sources of upstream surface water that drain onto disturbed areas shall be intercepted and conveyed to a stabilized discharge point downstream of the disturbed areas. Surface water collection measures shall be installed concurrently with or immediately following rough grading and shall be designed, constructed, and stabilized as needed to minimize erosion.

7. **Dewatering Control:** The water resulting from construction site de-watering activities must be treated prior to discharge or disposed of as specified.
8. **Dust Control:** Preventative measures to minimize wind transport of soil shall be implemented when a traffic hazard may be created or when sediment transported by wind is likely to be deposited in water resources.
9. **Flow Control:** Surface water from disturbed areas must be routed through the project's onsite flow control facility or other provisions must be made to prevent increases in the existing site conditions 2-year and 10-year runoff peaks discharging from the project site during construction (flow control facility, runoff treatment facility, and on-site BMP areas [existing or proposed] shall not be used for this purpose).
10. **Control Pollutants:** Stormwater pollution prevention (SWPPS) measures are required to prevent, reduce, or eliminate the discharge of pollutants to onsite or adjacent stormwater systems or watercourses from construction-related activities such as materials delivery and storage, onsite equipment fueling and maintenance, demolition of existing buildings and disposition of demolition materials and other waste, and concrete handling, washout and disposal. Section D.2.2 describes BMPs specific to this purpose; additionally, several of the ESC BMPs described herein are applicable.
11. **Protect Existing and Proposed Stormwater Facilities and On-site BMPs:** Sedimentation and soil compaction reduce the infiltration capacity of native and engineered soils. Protection measures shall be applied/installed and maintained so as to prevent adverse impacts to existing stormwater facilities and on-site BMPs and areas of proposed stormwater facilities and on-site BMPs for the project. Adverse impacts can prompt the requirement to restore or replace affected stormwater facilities and on-site BMPs.
12. **Maintain Protective BMPs:** Protection measures shall be maintained to ensure continued performance of their intended function, to prevent adverse impacts to existing BMPs/facilities and areas of proposed BMPs/facilities, and protect other disturbed areas of the project.
13. **Manage the Project:** Coordination and timing of site development activities relative to ESC concerns, and timely inspection, maintenance and update of protective measures are necessary to effectively manage the project and ensure the success of protective ESC and SWPPS design and implementation.

D.2.1.1 CLEARING LIMITS

Prior to any site clearing or grading, those areas that are to remain undisturbed during project construction shall be delineated. At a minimum, clearing limits shall be installed at the edges of all critical area buffers and any other areas required to be left uncleared such as portions of the site subject to clearing limits under RMC 4-4-060, areas around significant trees identified to be retained, on-site BMP areas to be protected, and other areas identified to be left undisturbed to protect sensitive features.

Purpose: The purpose of clearing limits is to prevent disturbance of those areas of the project site that are not designated for clearing or grading. This is important because limiting site disturbance is the single most effective method for reducing erosion. Clearing limits may also be used to control construction traffic, thus reducing the disturbance of soil and limiting the amount of sediment tracked off site.

When to Install: Clearing limits shall be installed prior to the clearing and/or grading of the site.

Measures to Use: Marking clearing limits by delineating the site with a continuous length of brightly colored survey tape is sometimes sufficient. The tape may be supported by vegetation or stakes, and it shall be 3 to 6 feet high and highly visible. Critical areas and their buffers require more substantial

protection and shall be delineated with plastic or metal safety fences or stake and wire fences. Fencing may be required at the City's discretion to control construction traffic or at any location where greater protection is warranted. Permanent fencing may also be used if desired by the applicant. Silt fence, in combination with survey flagging, is also an acceptable method of marking critical areas and their buffers.

D.2.1.1.1 PLASTIC OR METAL FENCE

Code: FE Symbol:

Purpose

Fencing is intended to (1) restrict clearing to approved limits; (2) prevent disturbance of critical areas, their buffers, and other areas required to be left undisturbed; (3) limit construction traffic to designated construction entrances or roads; and (4) protect areas where marking with survey tape may not provide adequate protection.

Conditions of Use

To establish clearing limits, plastic or metal fence may be used:

1. At the boundary of critical areas, their buffers, and other areas required to be left uncleared.
2. As necessary to control vehicle access to and on the site (see Sections D.2.1.4.1 and D.2.1.4.2).

Design and Installation Specifications

1. The fence shall be designed and installed according to the manufacturer's specifications.
2. The fence shall be at least 3 feet high and must be highly visible.
3. The fence shall not be wired or stapled to trees.

Maintenance Requirements

1. If the fence has been damaged or visibility reduced, it shall be repaired or replaced immediately and visibility restored.
2. Disturbance of a critical area, critical area buffer, native growth retention area, or any other area required to be left undisturbed shall be reported to the City for resolution.

D.2.1.2 COVER MEASURES

Temporary and permanent cover measures shall be provided to protect all disturbed areas, including the faces of cut and fill slopes. Temporary cover shall be installed if an area is to remain unworked for more than seven days during the dry season (May 1 to September 30) or for more than two consecutive working days during the wet season (October 1 to April 30). These time limits may be relaxed if an area poses a low risk of erosion due to soil type, slope gradient, anticipated weather conditions, or other factors. Conversely, the City may reduce these time limits if site conditions warrant greater protection (e.g., adjacent to significant aquatic resources or highly erosive soils) or if significant precipitation (see Section D.2.4.2) is expected. Any area to remain unworked for more than 30 days shall be seeded or sodded, unless the City determines that winter weather makes vegetation establishment infeasible. During the wet season, slopes and stockpiles at 3H:1V or steeper and with more than ten feet of vertical relief shall be covered if they are to remain unworked for more than 12 hours. Also during the wet season, the material necessary to cover all disturbed areas must be stockpiled on site. The intent of these cover requirements is to have as much area as possible covered during any period of precipitation.

Purpose: The purpose of covering exposed soils is to prevent erosion, thus reducing reliance on less effective methods that remove sediment after it is entrained in runoff. Cover is the only practical method of reducing turbidity in runoff. Structural measures, such as silt fences and sediment ponds, are only capable of removing coarse particles and in most circumstances have little to no effect on turbidity.

When to Install: Any exposed soils that will remain unworked for more than the time limit set above shall be covered by the end of the working day. If the exposed area is to remain unworked for more than

DRAFT

30 days, the area shall be seeded with the temporary seed mix or an equivalent mix that will provide rapid protection (see Section D.2.1.2.6). If the disturbed area is to remain unworked for a year or more or if the area has reached final grade, permanent seed mix or an equivalent mix shall be applied.

Measures to Use: Cover methods include the use of surface roughening, mulch, erosion control nets and blankets, plastic covering, seeding, and sodding. Mulch and plastic sheeting are primarily intended to protect disturbed areas for a short period of time, typically days to a few months. Seeding and sodding are measures for areas that are to remain unworked for months. Erosion nets and blankets are to be used in conjunction with seeding steep slopes. The choice of measures is left to the designer; however, there are restrictions on the use of these methods, which are listed in the "Conditions of Use" and the "Design and Installation Specifications" sections for each measure.

The methods listed are by no means exhaustive. Variations on the standards presented here are encouraged if other cost-effective products or methods provide substantially equivalent or superior performance. Also, the details of installation can, and should, vary with the site conditions. A useful reference on the application of cover measures in the Puget Sound area is *Improving the Cost Effectiveness of Highway Construction Site Erosion and Pollution Control*, Horner, Guedry, and Kortenhof (1990).

D.2.1.2.1 SURFACE ROUGHENING

Purpose

The purpose of surface roughening is to aid in the establishment of vegetative cover and to reduce runoff velocity, increase infiltration, and provide for sediment trapping through the provision of a rough soil surface. The rough soil surface may be created by operating a tiller or other equipment on the contour to form horizontal depressions or by leaving slopes in a roughened condition by not fine grading.

Conditions of Use

1. All slopes steeper than 3H:1V and greater than 5 vertical feet require surface roughening.
2. Areas with grades steeper than 3H:1V should be roughened to a depth of 2 to 4 inches prior to seeding.
3. Areas that will not be stabilized immediately may be roughened to reduce runoff velocity until seeding takes place.
4. Slopes with a stable rock face do not require roughening.
5. Slopes where mowing is planned should not be excessively roughened.

Design and Installation Specifications

There are different methods for achieving a roughened soil surface on a slope, and the selection of an appropriate method depends upon the type of slope. Roughening methods include stair-step grading, grooving, contour furrows, and tracking. See Figure D.2.1.2.A for information on tracking and contour furrows. Factors to be considered in choosing a method are slope steepness, mowing requirements, and whether the slope is formed by cutting or filling. Sole reliance on roughening for temporary erosion control is of limited effectiveness in intense rainfall events. Stair-step grading may not be practical for sandy, steep, or shallow soils.

1. Disturbed areas that will not require mowing may be stair-step graded, grooved, or left rough after filling
2. Stair Step grading is particularly appropriate in soils containing large amounts of soft rock. Each "step" catches material that sloughs from above, and provides a level site where vegetation can become established. Stairs should be wide enough to work with standard earth moving equipment. Stair steps must be on contour or gullies will form on the slope.
3. Areas that will be mowed (slopes less steep than 3H:1V) may have small furrows left by disking, harrowing, raking, or seed-planting machinery operated on the contour.

DRAFT

4. Graded areas with slopes greater than 3H:1V but less than 2H:1V should be roughened before seeding. This can be accomplished in a variety of ways, including “track walking” or driving a crawler tractor up and down the slope, leaving a pattern of cleat imprints parallel to slope contours.
5. Tracking is done by operating equipment up and down the slope to leave horizontal depressions in the soil.

Maintenance Standards

Periodically check roughened, seeded, planted, and mulched slopes for rills and gullies, particularly after a significant storm event. Fill these areas slightly above the original grade, then re-seed and mulch as soon as possible.

DRAFT

FIGURE D.2.1.2.A SURFACE ROUGHENING

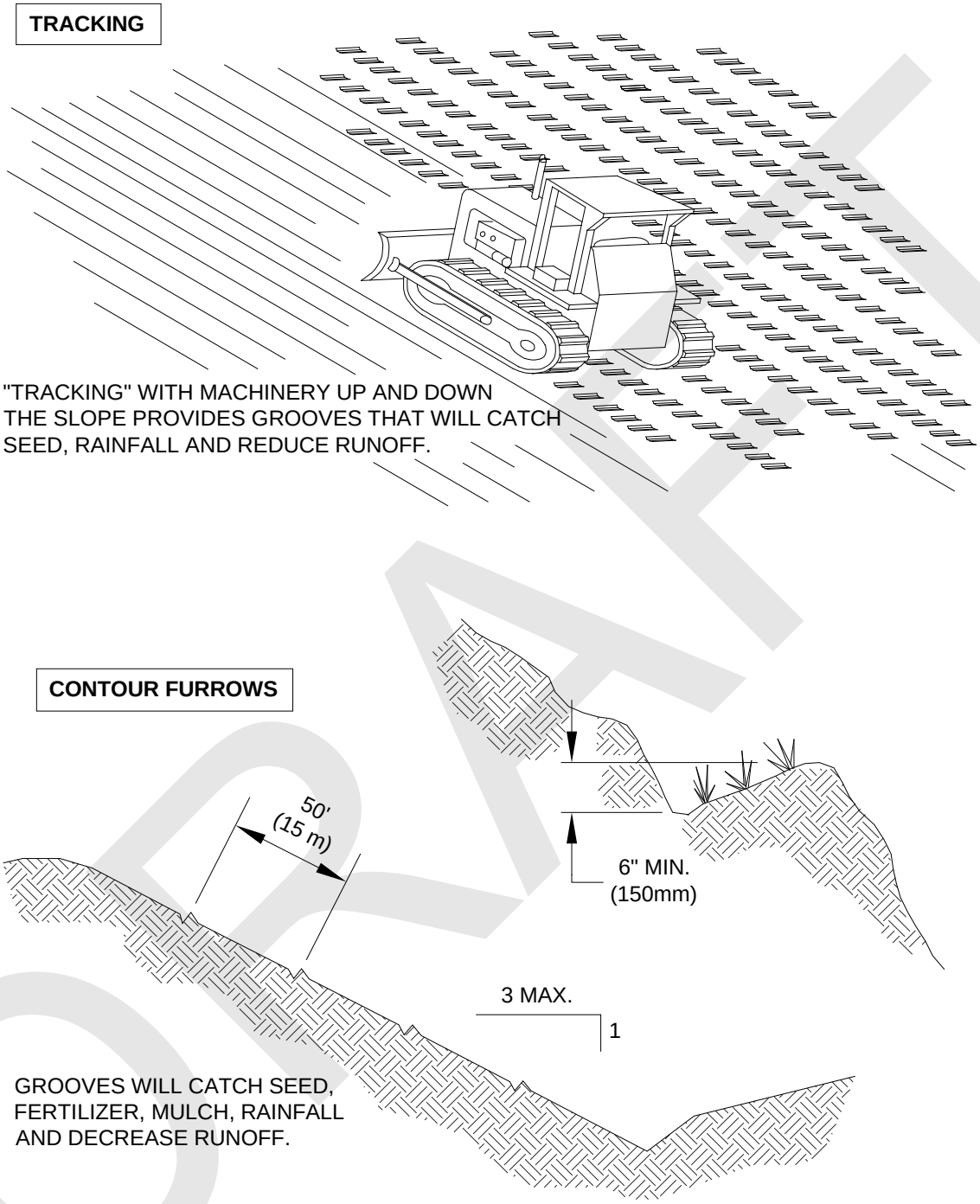

SURFACE ROUGHENING BY TRACKING AND CONTOUR FURROWS

NTS

DRAFT

D.2.1.2.2 MULCHING

Code: MU Symbol:

Purpose

The purpose of mulching soils is to provide immediate temporary protection from erosion. Mulch also enhances plant establishment by conserving moisture, holding fertilizer, seed, and topsoil in place, and moderating soil temperatures. There is an enormous variety of mulches that may be used. Only the most common types are discussed in this section.

Conditions of Use

As a temporary cover measure, mulch should be used:

1. On disturbed areas that require cover measures for less than 30 days
2. As a cover for seed during the wet season and during the hot summer months
3. During the wet season on slopes steeper than 3H:1V with more than 10 feet of vertical relief.

Design and Installation Specifications

For mulch materials, application rates, and specifications, see Table D.2.1.2.A. *Note: Thicknesses may be increased for disturbed areas in or near critical areas or other areas highly susceptible to erosion.*

Maintenance Standards

1. The thickness of the cover must be maintained.
2. Any areas that experience erosion shall be remulched and/or protected with a net or blanket. If the erosion problem is drainage related, then the drainage problem shall be assessed and alternate drainage such as interceptor swales may be needed to fix the problem and the eroded area remulched.

DRAFT

TABLE D.2.1.2.A MULCH STANDARDS AND GUIDELINES			
Mulch Material	**Quality Standards**	**Application Rates**	**Remarks**
Straw	Air-dried; free from undesirable seed and coarse material	2″–3″ thick; 5 bales per 1,000 sf or 2–3 tons per acre	Cost-effective protection when applied with adequate thickness. Hand-application generally requires greater thickness than blown straw. Straw should be crimped to avoid wind blow. The thickness of straw may be reduced by half when used in conjunction with seeding.
Wood Fiber Cellulose	No growth inhibiting factors	Approx. 25–30 lbs per 1,000 sf or 1,500–2,000 lbs per acre	Shall be applied with hydromulcher. Shall not be used without seed and tackifier unless the application rate is at least doubled. Some wood fiber with very long fibers can be effective at lower application rates and without seed or tackifier.
Compost	No visible water or dust during handling. Must be purchased from supplier with Solid Waste Handling Permit.	2″ thick min.; approx. 100 tons per acre (approx. 1.5 cubic feet per square yard)	More effective control can be obtained by increasing thickness to 3″ (2.25 cubic feet per square yard). Excellent mulch for protecting final grades until landscaping because it can be directly seeded or tilled into soil as an amendment. Compost may not be used in Sensitive Lake[7] basins unless analysis of the compost shows no phosphorous release.
Hydraulic Matrices (Bonded Fiber Matrix [BFM])	This mulch category includes hydraulic slurries composed of wood fiber, paper fiber or a combination of the two held together by a binding system. The BFM shall be a mixture of long wood fibers and various bonding agents.	Apply at rates from 3,000 lbs per acre to 4,000 lbs per acre and based on manufacturers recommendations	The BFM shall not be applied immediately before, during or immediately after rainfall so that the matrix will have an opportunity to dry for 24 hours after installation. Application rates beyond 2,500 pounds may interfere with germination and are not usually recommended for turf establishment. BFM is generally a matrix where all fiber and binders are in one bag, rather than having to mix components from various manufacturers to create a matrix. BFMs can be installed via helicopter in remote areas. They are approximately $1,000 per acre cheaper to install.
Chipped Site Vegetation	Average size shall be several inches.	2″ minimum thickness	This is a cost-effective way to dispose of debris from clearing and grubbing, and it eliminates the problems associated with burning. Generally, it should not be used on slopes above approx. 10% because of its tendency to be transported by runoff. It is not recommended within 200 feet of surface waters. If seeding is expected shortly after mulch, the decomposition of the chipped vegetation may tie up nutrients important to grass establishment.

[7] *Sensitive lake* means a lake that has proved to be particularly prone to eutrophication; the City did not have any lakes that had this designation at the time of SWDM adoption.

D.2.1.2.3 NETS AND BLANKETS

Code: NE Symbol:

Purpose

Erosion control nets and blankets are intended to prevent erosion and hold seed and mulch in place on steep slopes and in channels so that vegetation can become well established. In addition, some nets and blankets can be used to permanently reinforce turf to protect drainage ways during high flows. Nets are strands of material woven into an open, but high-tensile strength net (for example, jute matting). Blankets are strands of material that are not tightly woven, but instead form a layer of interlocking fibers, typically held together by a biodegradable or photodegradable netting (for example, excelsior or straw blankets). They generally have lower tensile strength than nets, but cover the ground more completely. Coir (coconut fiber) fabric comes as both nets and blankets.

Conditions of Use

Erosion control nets and blankets should be used:

1. For permanent stabilization of slopes 2H:1V or greater and with more than 10 feet of vertical relief.
2. In conjunction with seed for final stabilization of a slope, not for temporary cover. However, they may be used for temporary applications as long as the product is not damaged by repeated handling. In fact, this method of slope protection is superior to plastic sheeting, which generates high-velocity runoff (see Section D.2.1.2.4).
3. For drainage ditches and swales (highly recommended). The application of appropriate netting or blanket to drainage ditches and swales can protect bare soil from channelized runoff while vegetation is established. Nets and blankets also can capture a great deal of sediment due to their open, porous structure. Synthetic nets and blankets may be used to permanently stabilize channels and may provide a cost-effective, environmentally preferable alternative to riprap.

Design and Installation Specifications

1. See Figure D.2.1.2.B and Figure D.2.1.2.C for **typical orientation and installation** of nettings and blankets. *Note: Installation is critical to the effectiveness of these products. If good ground contact is not achieved, runoff can concentrate under the product, resulting in significant erosion.*
2. With the variety of products available, it is impossible to cover all the details of appropriate use and installation. Therefore, it is critical that the design engineer thoroughly consults the **manufacturer's information** and that a site visit takes place in order to ensure that the product specified is appropriate.
3. Jute matting must be used in conjunction with mulch (Section D.2.1.2.2). Excelsior, woven straw blankets, and coir (coconut fiber) blankets may be installed without mulch. There are many other types of **erosion control nets and blankets** on the market that may be appropriate in certain circumstances. Other types of products will have to be evaluated individually. In general, most nets (e.g., jute matting) require mulch in order to prevent erosion because they have a fairly open structure. Blankets typically do not require mulch because they usually provide complete protection of the surface.
4. Purely synthetic blankets are allowed but shall only be used for long-term stabilization of waterways. The organic blankets authorized above are better for slope protection and short-term waterway protection because they retain moisture and provide organic matter to the soil, substantially improving the speed and success of re-vegetation.

Maintenance Standards

1. Good contact with the ground must be maintained, and there must not be erosion beneath the net or blanket.

DRAFT

2. Any areas of the net or blanket that are damaged or not in close contact with the ground shall be repaired and stapled.
3. If erosion occurs due to poorly controlled drainage, the problem shall be fixed and the eroded area protected.

FIGURE D.2.1.2.B WATERWAY INSTALLATION

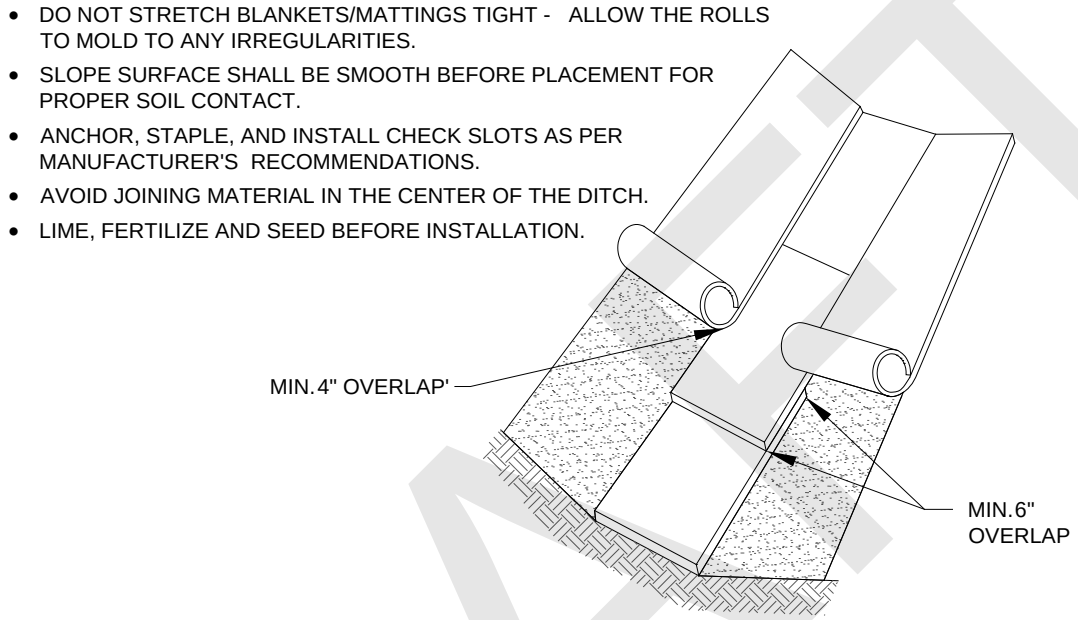

FIGURE D.2.1.2.C SLOPE INSTALLATION

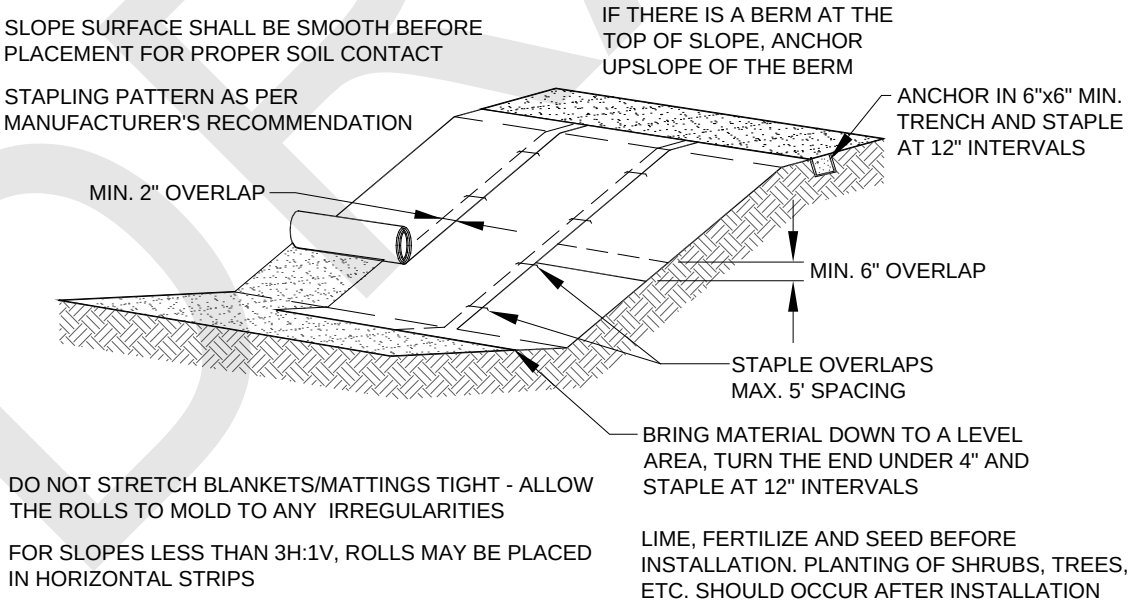

DRAFT

D.2.1.2.4 PLASTIC COVERING

Code: PC Symbol: PC

Purpose

Plastic covering provides immediate, short-term erosion protection to slopes and disturbed areas.

Conditions of Use

1. Plastic covering may be used on disturbed areas that require cover measures for less than 30 days.
2. Plastic is particularly useful for protecting cut and fill slopes and stockpiles. *Note: The relatively rapid breakdown of most polyethylene sheeting makes it unsuitable for long-term applications.*
3. Clear plastic sheeting may be used over newly-seeded areas to create a greenhouse effect and encourage grass growth. Clear plastic should not be used for this purpose during the summer months because the resulting high temperatures can kill the grass.
4. Due to rapid runoff caused by plastic sheeting, this method shall not be used upslope of areas that might be adversely impacted by concentrated runoff. Such areas include steep and/or unstable slopes.

Note: There have been many problems with plastic, usually attributable to poor installation and maintenance. However, the material itself can cause problems, even when correctly installed and maintained, because it generates high-velocity runoff and breaks down quickly due to ultraviolet radiation. In addition, if the plastic is not completely removed, it can clog drainage system inlets and outlets. It is highly recommended that alternatives to plastic sheeting be used whenever possible and that its use be limited.

Design and Installation Specifications

1. See Figure D.2.1.2.D for details.
2. Plastic sheeting shall have a minimum thickness of 0.06 millimeters.
3. If erosion at the toe of a slope is likely, a gravel berm, riprap, or other suitable protection shall be installed at the toe of the slope in order to reduce the velocity of runoff.

FIGURE D.2.1.2.D PLASTIC COVERING

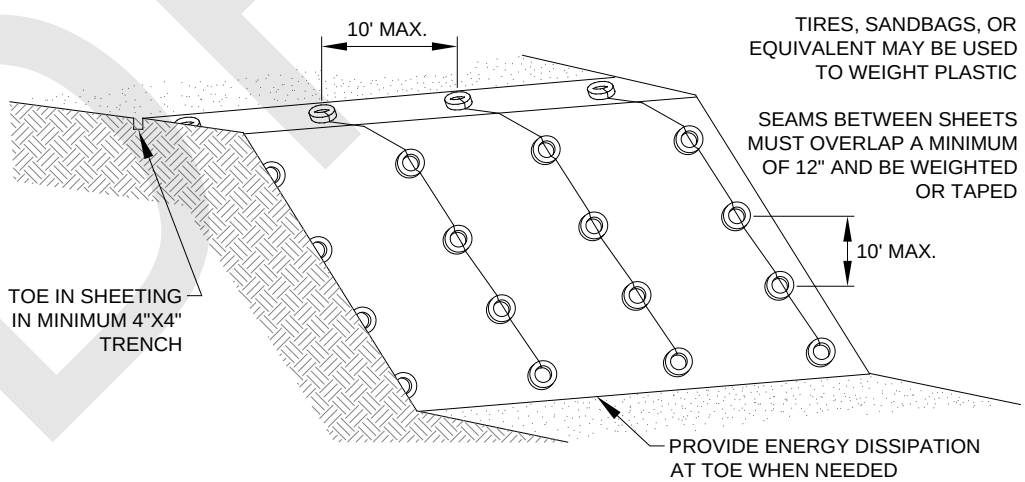

DRAFT

Maintenance Standards for Plastic Covering

1. Torn sheets must be replaced and open seams repaired.
2. If the plastic begins to deteriorate due to ultraviolet radiation, it must be completely removed and replaced.
3. When the plastic is no longer needed, it shall be completely removed.

D.2.1.2.5 STRAW WATTLES

Code: SW Symbol:

Purpose

Wattles are erosion and sediment control barriers consisting of straw wrapped in biodegradable tubular plastic or similar encasing material. Wattles may reduce the velocity and can spread the flow of rill and sheet runoff, and can capture and retain sediment. Straw wattles are typically 8 to 10 inches in diameter and 25 to 30 feet in length. The wattles are placed in shallow trenches and staked along the contour of disturbed or newly constructed slopes.

Conditions of Use

1. Install on disturbed areas that require immediate erosion protection.
2. Use on slopes requiring stabilization until permanent vegetation can be established.
3. Can be used along the perimeter of a project, as a check dam in unlined ditches and around temporary stockpiles
4. Wattles can be staked to the ground using willow cuttings for added revegetation.
5. Rilling can occur beneath and between wattles if not properly entrenched, allowing water to pass below and between wattles

Design and Installation Specifications

1. It is critical that wattles are installed perpendicular to the flow direction and parallel to the slope contour.
2. Narrow trenches should be dug across the slope, on contour, to a depth of 3 to 5 inches on clay soils and soils with gradual slopes. On loose soils, steep slopes, and during high rainfall events, the trenches should be dug to a depth of 5 to 7 inches, or ½ to 2/3 of the thickness of the wattle.
3. Start construction of trenches and installing wattles from the base of the slope and work uphill. Excavated material should be spread evenly along the uphill slope and compacted using hand tamping or other method. Construct trenches at contour intervals of 3 to 30 feet apart depending on the steepness of the slope, soil type, and rainfall. The steeper the slope the closer together the trenches should be constructed.
4. Install the wattles snugly into the trenches and abut tightly end to end. Do not overlap the ends.
5. Install stakes at each end of the wattle, and at 4 foot centers along the entire length of the wattle.
6. If required, install pilot holes for the stakes using a straight bar to drive holes through the wattle and into the soil.
7. At a minimum, wooden stakes should be approximately ¾ x ¾ x 24 inches. Willow cuttings or 3/8 inch rebar can also be used for stakes.
8. Stakes should be driven through the middle of the wattle, leaving 2 to 3 inches of the stake protruding above the wattle.

DRAFT

Maintenance Standards

1. Inspect wattles prior to forecasted rain, daily during extended rain events, after rain events, weekly during the wet season, and at two week intervals at all other times of the year.
2. Repair or replace split, torn, raveling, or slumping wattles
3. Remove sediment accumulations when exceeding ½ the height between the top of the wattle and the ground surface.

DRAFT

FIGURE D.2.1.2.E STRAW WATTLES

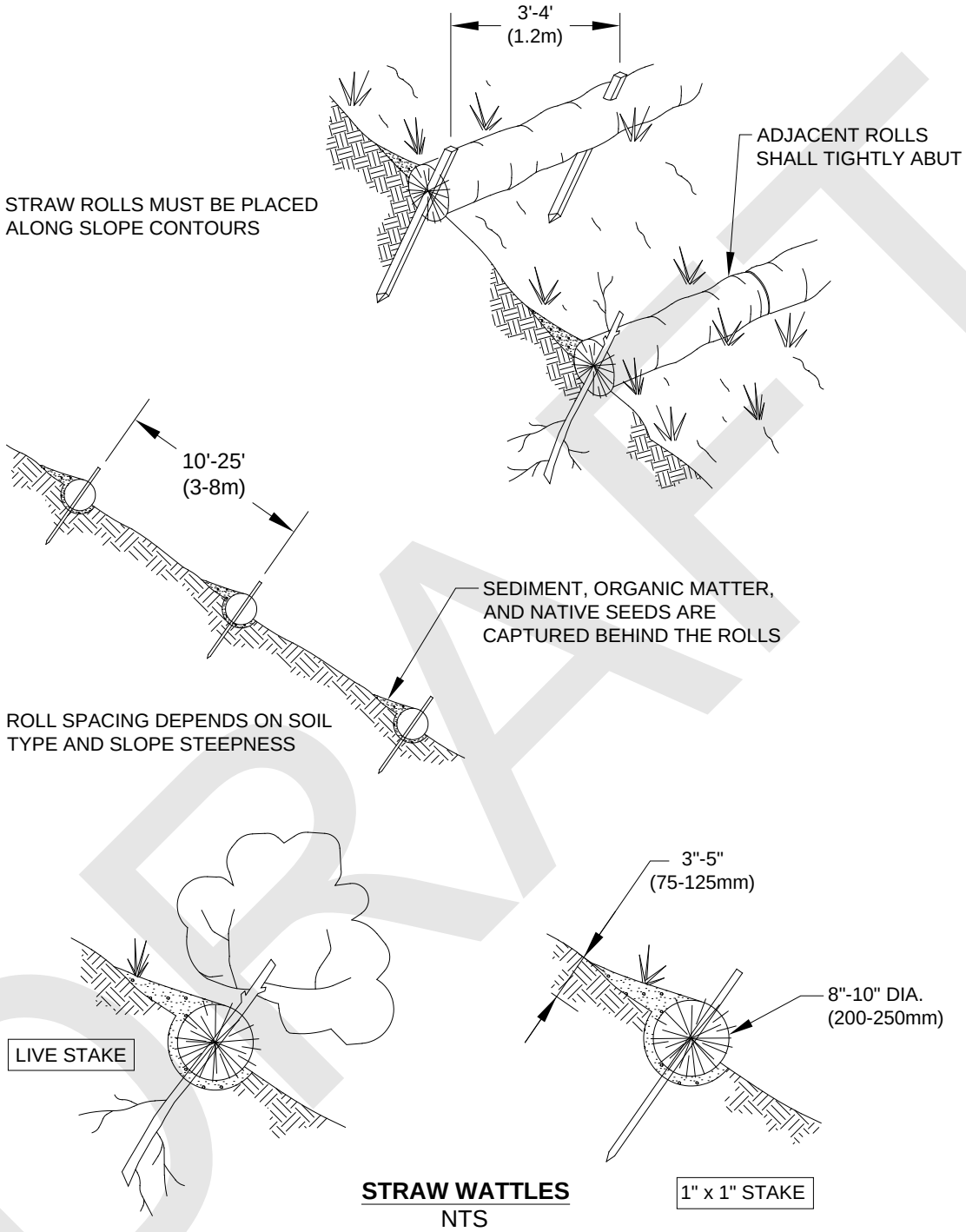

STRAW WATTLES
NTS

NOTES:

1. STRAW ROLL INSTALLATION REQUIRES THE PLACEMENT AND SECURE STAKING OF THE ROLL IN A TRENCH, 3" x 5" (75-125mm) DEEP, DUG ON CONTOUR.
2. RUNOFF MUST NOT BE ALLOWED TO RUN UNDER OR AROUND ROLL.

DRAFT

D.2.1.2.6 TEMPORARY AND PERMANENT SEEDING

Code: SE Symbol:

Purpose

Seeding is intended to reduce erosion by stabilizing exposed soils. A well-established vegetative cover is one of the most effective methods of reducing erosion.

Conditions of Use

1. Seeding shall be used throughout the project on **disturbed areas** that have reached final grade or that will remain unworked for more than 30 days.
2. **Vegetation-lined channels** shall be seeded. Channels that will be vegetated should be installed before major earthwork and hydroseeded or covered with a Bonded Fiber Matrix (BFM).
3. **Retention/detention ponds** shall be seeded as required.
4. At the City's discretion, seeding without mulch during the **dry season** is allowed even though it will take more than seven days to develop an effective cover. Mulch is, however, recommended at all times because it protects seeds from heat, moisture loss, and transport due to runoff.
5. Prior to the beginning of the **wet season**, all disturbed areas shall be reviewed to identify which ones can be seeded in preparation for the winter rains (see Section D.2.4.2). Disturbed areas shall be seeded within one week of the beginning of the wet season. A sketch map of those areas to be seeded and those areas to remain uncovered shall be submitted to the CED inspector. The CED inspector may require seeding of additional areas in order to protect surface waters, adjacent properties, or drainage facilities.
6. At final site stabilization, all disturbed areas not otherwise vegetated or stabilized shall be seeded and mulched (see Section D.2.4.5).

Design and Installation Specifications

1. The best **time to seed** is fall (late September to October) or in spring (mid-March to June). **Irrigation** is required during the first summer following installation if seeding occurs in spring or summer or during prolonged dry times of year. Areas may also be seeded during the winter months, but it may take additional spring seeding applications to develop a dense groundcover due to cold temperatures. The application and maintenance of mulch is critical for winter seeding.
2. To prevent seed from being washed away, confirm that **all required surface water control measures** have been installed.
3. The **seedbed** should not be compacted because soils that are well compacted will not vegetate as quickly or thoroughly. Slopes steeper than 3H:1V shall be surface roughened. Roughening can be accomplished in a variety of ways, but the typical method is track walking, or driving a crawling tractor up and down the slope, leaving cleat imprints parallel to the slope contours.
4. In general, 10-20-20 N-P-K (nitrogen-phosphorus-potassium) **fertilizer** may be used at a rate of 90 pounds per acre. Slow-release fertilizers are preferred because they are more efficient and have fewer environmental impacts. It is recommended that areas being seeded for final landscaping conduct soil tests to determine the exact type and quantity of fertilizer needed. This will prevent the over-application of fertilizer. Disturbed areas within 200 feet of water bodies and wetlands must use slow-release low-phosphorus fertilizer (typical proportions 3-1-2 N-P-K).
5. The following requirements apply to **mulching**:
   a) Mulch is always required for seeding slopes greater than 3H:1V (see Section D.2.1.2.2).
   b) If seeding during the wet season, mulch is required.

DRAFT

c) The use of mulch may be required during the dry season at the City's discretion if grass growth is expected to be slow, the soils are highly erodible due to soil type or gradient, there is a water body close to the disturbed area, or significant precipitation (see Section D.2.4.2) is anticipated before the grass will provide effective cover.

d) Mulch may be applied on top of the seed or simultaneously by hydroseeding.

6. **Hydroseeding** is allowed as long as tackifier is included. Hydroseeding with wood fiber mulch is adequate during the dry season. Application of hydroseeded wood fiber mulch should be appropriate for slope angle. Follow manufacturer specifications for application rates.

7. Areas to be permanently landscaped shall use **soil amendments**. Good quality topsoil shall be tilled into the top six inches to reduce the need for fertilizer and improve the overall soil quality. Most native soils will require the addition of four inches of well-rotted compost to be tilled into the soil to provide a good quality topsoil. Compost used should meet specifications provided in Reference Section 11-C of the *SWDM*.

8. The **seed mixes** listed below include recommended mixes for both temporary and permanent seeding. These mixes, with the exception of the wetland mix, shall be applied at a rate of 80 to 100 seeds per square foot. Wet sites should apply 120 to 150 seeds per square foot. Local suppliers should be consulted for information on current Pure Live Seed (PLS) rates and species specific seeds per pound in order to determine seed mix PLS pounds of seed per acre. The appropriate mix depends on a variety of factors, including exposure, soil type, slope, and expected foot traffic. Alternative seed mixes approved by the City may be used.

Table D.2.1.2.B presents the standard mix for those areas where t a temporary or permanent vegetative cover is required. The following mix assumes a desired 150 seeds per square foot and should be applied at approximately 37 pounds of pure live seed per acre.

TABLE D.2.1.2.B EROSION CONTROL SEED MIX

Common Name/ Latin Name	% Species Composition	Desired Seeds per Square Foot	PLS pounds/Acre
Spike bentgrass/*Agrostis exarata*	6	9	0.1
California brome/*Bromus carinatus*	15	23	9.8
Tufted hairgrass/*Deschampsia cespitosa*	15	23	0.4
Blue wildrye/*Elymus glaucus*	18	27	10.7
California oatgrass/*Danthonia californica*	18	27	5.6
Native red fescue/*Festuca rubra* var. *rubra*	18	27	2.4
Meadow barley/*Hordeum brachyantherum*	10	15	7.7

DRAFT

Table D.2.1.2.C provides just one recommended possibility for landscaping seed. It assumes a desired 100 seeds per square foot and should be applied at 12 pounds of pure live seed per acre.

TABLE D.2.1.2.C LANDSCAPING SEED MIX

Common Name/Latin Name	% Species Composition	Desired Seeds per Square Foot	PLS pounds/Acre
Sideoats grama/*Bouteloua curtipendula*	20	30	6.8
California oatgrass/*Danthonia californica*	20	30	6.2
Native red fescue/*Festuca rubra* var. *rubra*	30	45	3.9
Prairie junegrass/*Koeleria macrantha*	30	45	0.8

This turf seed mix in Table D.2.1.2.D is for dry situations where there is no need for much water. The advantage is that this mix requires very little maintenance.

TABLE D.2.1.2.D LOW-GROWING TURF SEED MIX

Common Name/Latin Name	% Species Composition	Desired Seeds per Square Foot	PLS pounds/Acre
Hard fescue/*Festuca brevipila*	25	20	1.5
Sheep fescue/*Festuca ovina*	30	24	1.5
Native red fescue/*Festuca rubra* var. *rubra*	25	20	1.7
Prairie junegrass/*Koeleria macrantha*	20	16	0.3

Table D.2.1.2.E presents a mix recommended for bioswales and other intermittently wet areas. The mix assumes a desired 150 seeds per square foot and approximately 29 pounds of pure live seed per acre. Sod shall generally not be used for bioswales because the seed mix is inappropriate for this application. Sod may be used for lining ditches to prevent erosion, but it will provide little water quality benefit during the wet season.

DRAFT

TABLE D.2.1.2.E BIOSWALE SEED MIX			
Common Name/Latin Name	**% Species Composition**	**Desired Seeds per Square Foot**	**PLS pounds/Acre**
American sloughgrass/*Beckmannia syzigachne*	15	23	0.9
Tufted hairgrass/*Deschampsia cespitosa*	20	30	0.5
Blue wildrye/*Elymus glaucus*	18	27	10.7
Native red fescue/*Festuca rubra* var. *rubra*	20	30	2.6
Meadow barley/*Hordeum brachyantherum*	12	18	9.2
Northwestern mannagrass/*Glyceria occidentalis*	15	23	4.9

The seed mix shown in Table D.2.1.2.F is a recommended low-growing, non-invasive seed mix appropriate for very wet areas that are not regulated wetlands (if planting in wetland areas, see Section 6.3.1 of the *SWDM*). Other mixes may be appropriate, depending on the soil type and hydrology of the area. This mixture assumes a target goal of 150 seeds per square foot and should be applied at a rate of 36 pounds per acre.

TABLE D.2.1.2.F WET AREA SEED MIX*			
Common Name/Latin Name	**% Species Composition**	**Desired Seeds per Square Foot**	**PLS pounds/Acre**
California brome/*Bromus carinatus*	15	23	9.8
Columbia brome/*Bromus vulgaris*	18	27	8.1
Tufted hairgrass/*Deschampsia cespitosa*	15	23	0.4
California oatgrass/*Danthonia californica*	15	23	4.7
Native red fescue/*Festuca rubra* var. *rubra*	17	26	2.2
Western manna grass/*Glyceria occidentalis*	10	15	3.3
Meadow barley/*Hordeum brachyantherum*	10	15	7.7
* Modified Briargreen, Inc. Hydroseeding Guide Wetlands Seed Mix			

DRAFT

The meadow seed mix in Table D.2.1.2.G is recommended for areas that will be maintained infrequently or not at all and where colonization by native plants is desirable. Likely applications include rural road and utility right-of-way. Seeding should take place in September or very early October in order to obtain adequate establishment prior to the winter months. This seed mix assumes a target goal of 120 seeds per square foot and an application rate of 23 pounds of pure live seed per acre.

TABLE D.2.1.2.G MEADOW SEED MIX

Common Name/Latin Name	% Species Composition	Desired Seeds per Square Foot	PLS pounds/Acre
Common yarrow/*Achillea millefolium*	4	5	0.1
Pearly everlasting/*Anaphalis margartacae*	1	1	0.0
California brome/*Bromus carinatus*	15	18	7.8
California oatgrass/*Danthonia californica*	15	18	3.7
Blue wildrye/*Elymus glaucus*	16	19	7.6
Festuca idahoensis	15	18	1.7
Native red fescue/*Festuca rubra* var. *rubra*	18	22	1.9
Sickle keeled lupine/*Lupinus albicaulis*	1	1	2.2
Fowl bluegrass/*Poa palustris*	15	18	0.4

Maintenance Standards for Temporary and Permanent Seeding

1. Any seeded areas that fail to establish at least 80 percent cover within one month shall be reseeded. If reseeding is ineffective, an alternate method, such as sodding or nets/blankets, shall be used. If winter weather prevents adequate seed establishment and growth, this time limit may be relaxed at the discretion of the City when critical areas would otherwise be protected.
2. After adequate cover is achieved, any areas that experience erosion shall be re-seeded and protected by mulch. If the erosion problem is drainage related, the problem shall be fixed and the eroded area re-seeded and protected by mulch.
3. Seeded areas shall be supplied with adequate moisture, but not watered to the extent that it causes runoff.

D.2.1.2.7 SODDING

Code: SO Symbol: 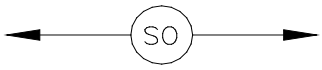

Purpose

The purpose of sodding is to establish permanent turf for immediate erosion protection and to stabilize drainage ways where concentrated overland flow will occur.

DRAFT

Conditions of Use

Sodding may be used in the following areas:

1. Disturbed areas that require short-term or long-term cover
2. Disturbed areas that require immediate vegetative cover
3. All waterways that require vegetative lining (except biofiltration swales—the seed mix used in most sod is not appropriate for biofiltration swales). Waterways may also be seeded rather than sodded, and protected with a net or blanket (see Section D.2.1.2.3).

Design and Installation Specifications

Sod shall be free of weeds, of uniform thickness (approximately 1-inch thick), and shall have a dense root mat for mechanical strength.

The following steps are recommended for sod installation:

1. Shape and smooth the surface to final grade in accordance with the approved grading plan.
2. Amend four inches (minimum) of well-rotted compost into the top eight inches of the soil if the organic content of the soil is less than ten percent. Compost used shall meet compost specifications per *SWDM* Reference Section 11-C.
3. Fertilize according to the supplier's recommendations. Disturbed areas within 200 feet of water bodies and wetlands must use non-phosphorus fertilizer.
4. Work lime and fertilizer 1 to 2 inches into the soil, and smooth the surface.
5. Lay strips of sod beginning at the lowest area to be sodded and perpendicular to the direction of water flow. Wedge strips securely into place. Square the ends of each strip to provide for a close, tight fit. Stagger joints at least 12 inches. Staple on slopes steeper than 3H:1V.
6. Roll the sodded area and irrigate.
7. When sodding is carried out in alternating strips or other patterns, seed the areas between the sod immediately after sodding.

Maintenance Standards

If the grass is unhealthy, the cause shall be determined and appropriate action taken to reestablish a healthy groundcover. If it is impossible to establish a healthy groundcover due to frequent saturation, instability, or some other cause, the sod shall be removed, the area seeded with an appropriate mix, and protected with a net or blanket.

D.2.1.2.8 POLYACRYLAMIDE FOR SOIL EROSION PROTECTION

Purpose

Polyacrylamide (PAM) is used on construction sites to prevent soil erosion. Applying PAM to bare soil in advance of a rain event significantly reduces erosion and controls sediment in two ways. First, PAM increases the soil's available pore volume, thus increasing infiltration through flocculation and reducing the quantity of stormwater runoff. Second, it increases flocculation of suspended particles and aids in their deposition, thus reducing stormwater runoff turbidity and improving water quality.

Conditions of Use

1. PAM shall not be directly applied to water or allowed to enter a water body.
2. PAM may be applied to wet soil, but dry soil is preferred due to less sediment loss.
3. PAM will work when applied to saturated soil but is not as effective as applications to dry or damp soil.

DRAFT

4. PAM may be applied only to the following types of bare soil areas that drain to a sediment trap or a sediment pond:
   - Staging areas
   - Stockpiles
   - Pit sites
   - Balanced cut and fill earthwork
   - Haul roads prior to placement of crushed rock surfacing
   - Compacted soil road base
5. PAM may be applied only during the following phases of construction:
   - During rough grading operations
   - After final grade and before paving or final seeding and planting
   - During a winter shut down of site work. In the case of winter shut down, or where soil will remain unworked for several months, PAM should be used together with mulch.
6. Do not use PAM on a slope that flows directly to a stream or wetland. The stormwater runoff shall pass through a sediment control measure prior to discharging to surface waters.

Design and Installation Specifications

1. PAM must be applied using one of two methods of application, "preferred" or "alternative." The specifications for these methods are described under separate headings below.
2. PAM may be applied in dissolved form with water, or it may be applied in dry, granular or powdered form. The preferred application method is the dissolved form.
3. PAM is to be applied at a maximum rate of ½ pound PAM per 1000 gallons of water per 1 acre of bare soil. Table D.2.1.2.H may be used to determine the PAM and water application rate for disturbed soil areas. Higher concentrations of PAM **do not** provide any additional effectiveness.
4. Do not add PAM to water discharging from the site.
5. PAM shall be used in conjunction with other ESC measures and not in place of them. When the total drainage area is greater than or equal to 3 acres, PAM treated areas shall drain to a sediment pond per Section D.2.1.5.2. For drainage areas less than 3 acres, PAM treated areas must drain to a sediment trap per Section D.2.1.5.1. Other normally required sediment control measures such as perimeter protection measures (Section D.2.1.3) and surface water collection measures (Section D.2.1.6) shall be applied to PAM treated areas.
6. All areas not being actively worked shall be covered and protected from rainfall. PAM shall not be the only cover BMP used.
7. Keep the granular PAM supply out of the sun. Granular PAM loses its effectiveness in three months after exposure to sunlight and air.
8. Care must be taken to prevent spills of PAM powder onto paved surfaces. PAM, combined with water, is very slippery and can be a safety hazard. During an application of PAM, prevent over-spray from reaching pavement as the pavement will become slippery. If PAM powder gets on skin or clothing, wipe it off with a rough towel rather than washing with water. Washing with water only makes cleanup more difficult, messier, and time consuming.
9. The specific PAM copolymer formulation must be anionic. Cationic PAM shall not be used in any application because of known aquatic toxicity concerns. Only the highest drinking water grade PAM, certified for compliance with ANSI/NSF Standard 60 for drinking water treatment, may be used for soil applications. The Washington State Department of Transportation (WSDOT) lists approved PAM products on their web page. All PAM use shall be reviewed and approved by CED.
10. The PAM anionic charge density may vary from 2 to 30 percent; a value of 18 percent is typical. Studies conducted by the United States Department of Agriculture (USDA)/ARS demonstrated that

DRAFT

soil stabilization was optimized by using very high molecular weight (12 to 15 mg/mole), highly anionic (>20% hydrolysis) PAM.

11. PAM must be "water soluble" or "linear" or "non-cross-linked." Cross-linked or water absorbent PAM, polymerized in highly acidic (pH<2) conditions, are used to maintain soil moisture content.

TABLE D.2.1.2.H PAM AND WATER APPLICATION RATES

Disturbed Area (ac)	PAM (lbs)	Water (gal)
0.50	0.25	500
1.00	0.50	1,000
1.50	0.75	1,500
2.00	1.00	2,000
2.50	1.25	2,500
3.00	1.50	3,000
3.50	1.75	3,500
4.00	2.00	4,000
4.50	2.25	4,500
5.00	2.50	5,000

Preferred Application Method

1. Pre-measure the area where PAM is to be applied and calculate the amount of product and water necessary to provide coverage at the specified application rate (1/2 pound PAM/1,000 gallons/acre).
2. Dissolve pre-measured dry granular PAM with a known quantity of clean water in a bucket several hours or overnight. PAM has infinite solubility in water, but dissolves very slowly. Mechanical mixing will help dissolve PAM. Always add PAM to water – not water to PAM.
3. Pre-fill the water truck about 1/8 full with water. The water does not have to be potable, but it must have relatively low turbidity – in the range of 20 NTU or less.
4. Add PAM/Water mixture to the truck.
5. Completely fill the water truck to specified volume.
6. Spray PAM/Water mixture onto dry soil until the soil surface is uniformly and completely wetted.

Alternate Application Method

PAM may also be applied as a powder at the rate of 5 pounds per acre. This must be applied on a day that is dry. For areas less than 5 to 10 acres, a hand-held "organ grinder" fertilized spreader set to the smallest setting will work. Tractor mounted spreaders will work for larger areas.

Maintenance Standards

1. PAM may be reapplied on actively worked areas after a 48-hour period
2. Reapplication is not required unless PAM treated soil is disturbed or unless turbidity levels show the need for an additional application. If PAM treated soil is left undisturbed, a reapplication may be

DRAFT

necessary after two months. More PAM applications may be required for steep slopes, silty and clay soils, (USDA classification Type “C” and “D” soils), long grades, and high precipitation areas. When PAM is applied first to bare soil and then covered with straw, a reapplication may not be necessary for several months.

D.2.1.2.9 COMPOST BLANKETS

Code: COBL Symbol:

Purpose

Compost blankets are intended to:

- Provide immediate temporary protection from erosion by protecting soil from rainfall and slowing flow velocity over the soil surface.
- Enhance temporary or permanent plant establishment by conserving moisture, holding seed and topsoil in place, providing nutrients and soil microorganisms, and moderating soil temperatures.
- Compost blankets, applied at the proper thickness and tilled into the soil, are also an option for amending soils for permanent landscaping.
- Compost generally releases and adds phosphorous to stormwater. Therefore, compost blankets are not recommended for use in watersheds where phosphorous sensitive water resources are located. Unless prior approval is given by the City, they should not be used in Sensitive Lake Watersheds.

Conditions of Use

1. Compost blankets may be used unseeded on disturbed areas that require temporary cover measures up to 1 year. Compost applied as temporary cover may be reclaimed and re-used for permanent cover.
2. Compost provides cover for protecting final grades until landscaping can be completed as it can be directly seeded or tilled into soil as an amendment.
3. Compost blankets meet mulch requirements for seed.
4. Seed may be applied to a compost blanket at any time for permanent or temporary stabilization of disturbed areas. Seed may be applied prior to blanket application, on top of blankets, or injected and mixed into the compost as it is applied.
5. Compost blankets may be applied on slopes up to 2H:1V.

Design and Installation Specifications

1. Compost shall be applied at a minimum of 2 inches thick, unless otherwise directed by an ESC supervisor or the City. At an application of 2 inches, this will equal approximately 100 tons per acre (compost generally weighs approximately 800 lbs per cubic yard). Thickness shall be increased at the direction of the design engineer for disturbed areas in or near critical areas or other areas highly susceptible to erosion.
2. Compost shall meet criteria in Reference Section 11-C of the *SWDM*.
3. Compost shall be obtained from a supplier meeting the requirements in Reference Section 11-C.
4. Compost blankets shall be applied over the top of the slope to which it is applied, to prevent water from running under the blanket
5. Compost blankets shall not be used in areas exposed to concentrated flow (e.g., channels, ditches, dikes)

DRAFT

Maintenance Standards

1. The specified thickness of the blanket/cover must be maintained.
2. Any areas that show signs of erosion must be re-mulched. If the erosion problem is drainage related, then the drainage problem must first be remedied and then the eroded area re-mulched.

D.2.1.3 PERIMETER PROTECTION

Perimeter protection to filter sediment from sheetwash shall be located downslope of all disturbed areas and shall be installed prior to upslope grading. Perimeter protection includes the use of vegetated strips as well as, constructed measures, such as silt fences, fiber rolls, sand/gravel barriers, brush or rock filters, triangular silt dikes and other methods. During the wet season, 50 linear feet of silt fence (and the necessary stakes) per acre of disturbed area must be stockpiled on site.

Purpose: The purpose of perimeter protection is to reduce the amount of sediment transported beyond the disturbed areas of the construction site. Perimeter protection is primarily a backup means of sediment control. Most, if not all, sediment-laden water is to be treated in a sediment trap or pond. The only circumstances in which perimeter control is to be used as a primary means of sediment removal is when the catchment is very small (see below).

When to Install: Perimeter protection is to be installed prior to any upslope clearing and grading.

Measures to Use: The above measures may be used interchangeably and are not the only perimeter protection measures available. If surface water is collected by an interceptor dike or swale and routed to a sediment pond or trap, there may be no need for the perimeter protection measures specified in this section.

Criteria for Use as Primary Treatment: At the boundary of a site, perimeter protection may be used as the sole form of treatment when the flowpath meets the criteria listed below. If these criteria are not met, perimeter protection shall only be used as a backup to a sediment trap or pond.

Average Slope	Slope Percent	Flowpath Length
1.5H:1V or less	67% or less	100 feet
2H:1V or less	50% or less	115 feet
4H:1V or less	25% or less	150 feet
6H:1V or less	16.7% or less	200 feet
10H:1V or less	10% or less	250 feet

D.2.1.3.1 SILT FENCE

Code: SF Symbol: ✕ ✕ ✕ ✕ ✕

Purpose

Use of a silt fence reduces the transport of coarse sediment from a construction site by providing a temporary physical barrier to sediment and reducing the runoff velocities of overland flow.

Conditions of Use

1. Silt fence may be used downslope of all disturbed areas.
2. Silt fence is not intended to treat concentrated flows, nor is it intended to treat substantial amounts of overland flow. Any concentrated flows must be conveyed through the drainage system to a sediment trap or pond. The only circumstance in which overland flow may be treated solely by a silt fence, rather than by a sediment trap or pond, is when the area draining to the fence is small (see "**Criteria for Use as Primary Treatment**" in Section D.2.1.3 above).

DRAFT

Design and Installation Specifications

1. See Figure D.2.1.3.A and Figure D.2.1.3.B for details.
2. The geotextile used must meet the standards listed below. A copy of the manufacturer's fabric specifications must be available on site.

AOS (ASTM D4751)	30–100 sieve size (0.60–0.15 mm) for slit film 50–100 sieve size (0.30–0.15 mm) for other fabrics
Water Permittivity (ASTM D4491)	0.02 sec^{-1} minimum
Grab Tensile Strength (ASTM D4632) (see Specification Note 3)	180 lbs. min. for extra strength fabric 100 lbs. min. for standard strength fabric
Grab Tensile Elongation (ASTM D4632)	30% max. (woven)
Ultraviolet Resistance (ASTM D4355)	70% min.

3. Standard strength fabric requires wire backing to increase the strength of the fence. Wire backing or closer post spacing may be required for extra strength fabric if field performance warrants a stronger fence.
4. Where the fence is installed, the slope shall be no steeper than 2H:1V.
5. If a typical silt fence (per Figure D.2.1.3.A) is used, the standard 4 x 4 trench may not be reduced as long as the bottom 8 inches of the silt fence is well buried and secured in a trench that stabilizes the fence and does not allow water to bypass or undermine the silt fence.

Maintenance Standards

1. Any damage shall be repaired immediately.
2. If concentrated flows are evident uphill of the fence, they must be intercepted and conveyed to a sediment trap or pond.
3. It is important to check the uphill side of the fence for signs of the fence clogging and acting as a barrier to flow and then causing channelization of flows parallel to the fence. If this occurs, replace the fence or remove the trapped sediment.
4. Sediment must be removed when the sediment is 6 inches high.
5. If the filter fabric (geotextile) has deteriorated due to ultraviolet breakdown, it shall be replaced.

DRAFT

FIGURE D.2.1.3.A SILT FENCE

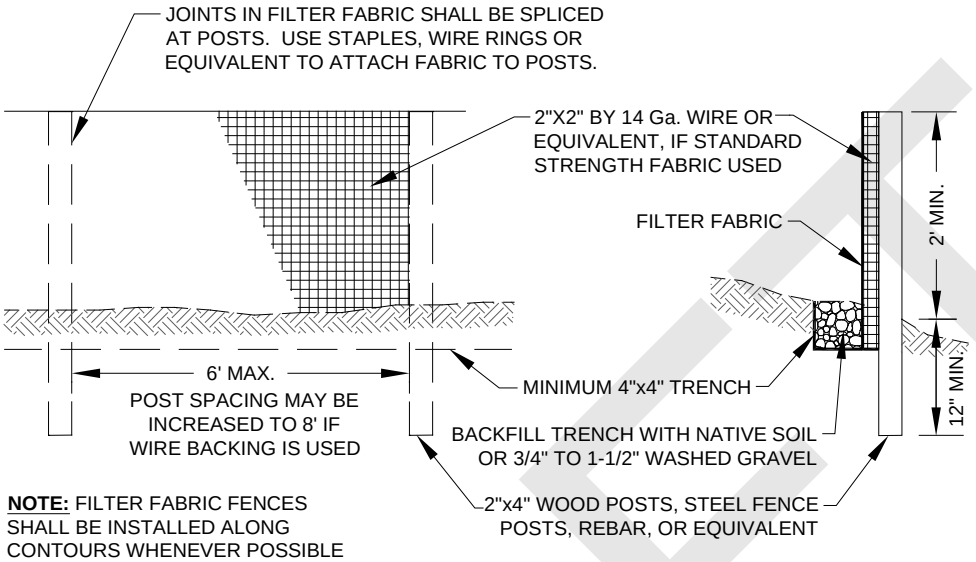

DRAFT

FIGURE D.2.1.3.B SILT FENCE INSTALLATION BY SLICING

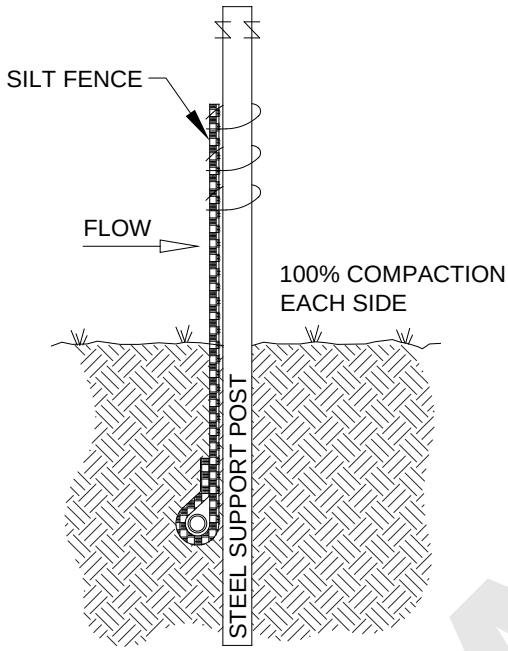

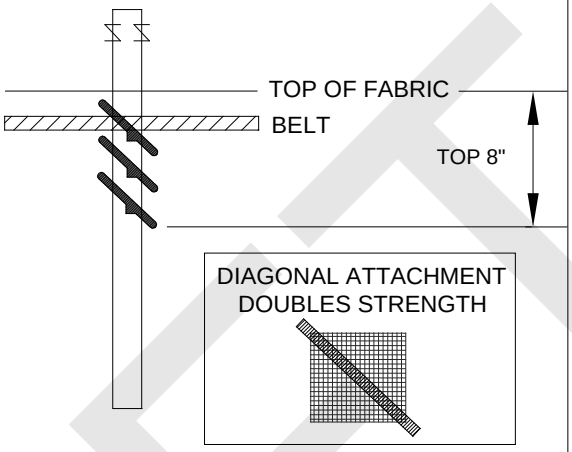

ATTACHMENT DETAILS:

1. GATHER FABRIC AT POSTS, IF NEEDED.
2. UTILIZE THREE TIES PER POST, ALL WITHIN TOP 8" OF FABRIC.
3. POSITION EACH TIE DIAGONALLY, PUNCTURING HOLES VERTICALLY A MINIMUM OF 1" APART.
4. HANG EACH TIE ON A POST NIPPLE AND TIGHTEN SECURELY. USE CABLE TIES (50 LBS) OF SOFT WIRE.

NOTES:

1. POST SPACING: 7' MAX. ON OPEN RUNS 4' MAX. ON POOLING AREAS.
2. POST DEPTH: AS MUCH BELOW GROUND AS FABRIC ABOVE GROUND.
3. PONDING HEIGHT MAX. 24" ATTACH FABRIC TO UPSTREAM SIDE OF POST.
4. DRIVE OVER EACH SIDE OF SILT FENCE 2 TO 4 TIMES WITH DEVICE EXERTING 60 P.S.I. OR GREATER.
5. NO MORE THAN 24" OF A 36" FABRIC IS ALLOWED ABOVE GROUND.
6. VIBRATORY PLOW IS NOT ACCEPTABLE BECAUSE OF HORIZONTAL COMPACTION.

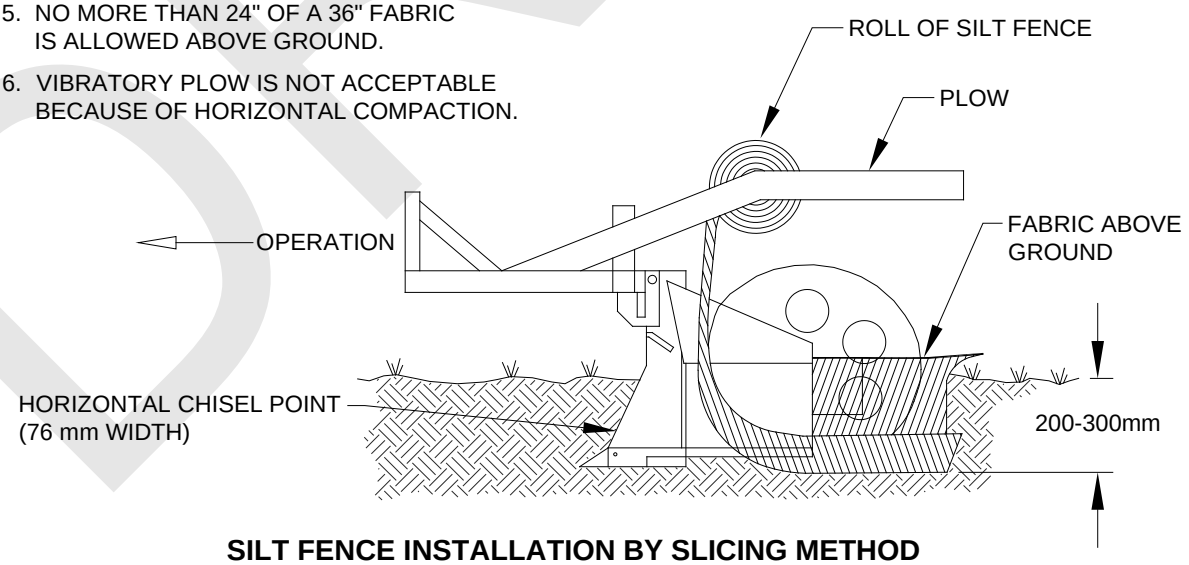

SILT FENCE INSTALLATION BY SLICING METHOD

NTS

DRAFT

D.2.1.3.2 BRUSH BARRIER

Code: BB Symbol:

Purpose

The purpose of brush barriers is to reduce the transport of coarse sediment from a construction site by providing a temporary physical barrier to sediment and reducing the runoff velocities of overland flow.

Conditions of Use

1. Brush barriers may be used downslope of all disturbed areas.
2. Brush barriers are not intended to treat concentrated flows, nor are they intended to treat substantial amounts of overland flow. Any concentrated flows must be conveyed through the drainage system to a sediment trap or pond. The only circumstance in which overland flow may be treated solely by a barrier, rather than by a sediment trap or pond, is when the area draining to the barrier is small (see "**Criteria for Use as Primary Treatment**" in Section D.2.1.3).

Design and Installation Specifications

1. See Figure D.2.1.3.C for details.
2. The City may require filter fabric (geotextile) anchored over the brush berm to enhance the filtration ability of the barrier.

Maintenance Standards

1. There shall be no signs of erosion or concentrated runoff under or around the barrier. If concentrated flows are bypassing the barrier, it must be expanded or augmented by toed-in filter fabric.
2. The dimensions of the barrier must be maintained.

FIGURE D.2.1.3.C BRUSH BARRIER

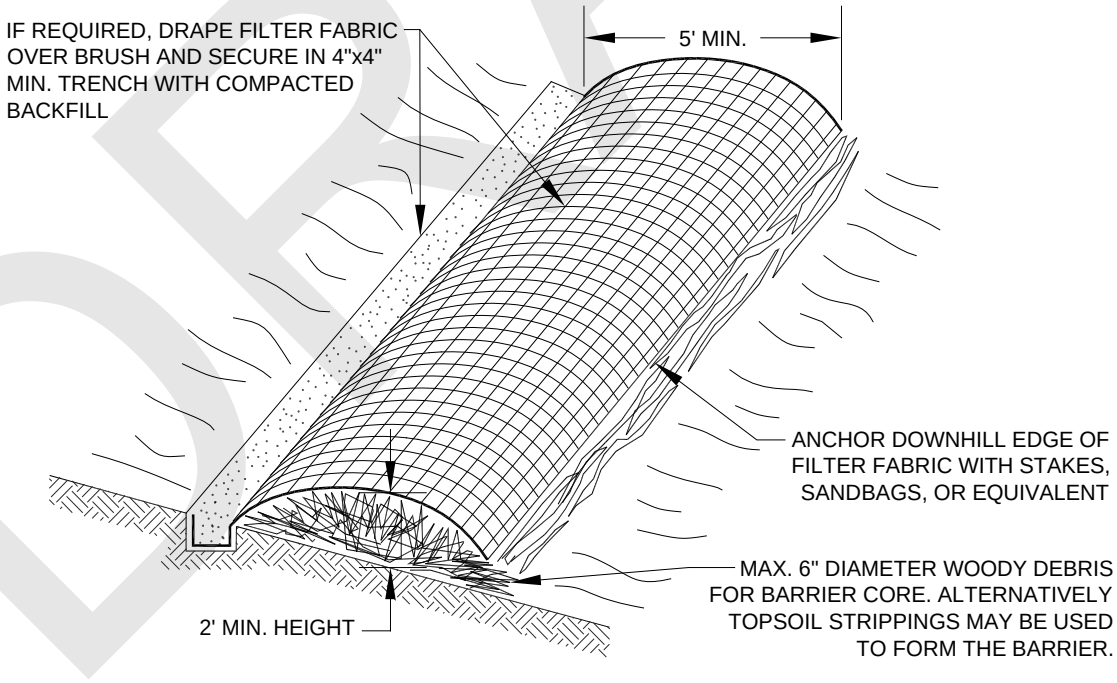

DRAFT

D.2.1.3.3 VEGETATED STRIP

Code: VS Symbol: 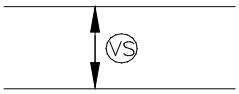

Purpose

Vegetated strips reduce the transport of coarse sediment from a construction site by providing a temporary physical barrier to sediment and reducing the runoff velocities of overland flow.

Conditions of Use

1. Vegetated strips may be used downslope of all disturbed areas.
2. Vegetated strips are not intended to treat concentrated flows, nor are they intended to treat substantial amounts of overland flow. Any concentrated flows must be conveyed through the drainage system to a sediment trap or pond. The only circumstance in which overland flow may be treated solely by a strip, rather than by a sediment trap or pond, is when the area draining to the strip is small (see "**Criteria for Use as Primary Treatment**" in Section D.2.1.3).

Design and Installation Specifications

1. The vegetated strip shall consist of a 25-foot minimum width continuous strip of dense vegetation with a permeable topsoil. Grass-covered, landscaped areas are generally not adequate because the volume of sediment overwhelms the grass. Ideally, vegetated strips shall consist of undisturbed native growth with a well-developed soil that allows for infiltration of runoff.
2. The slope within the strip shall not exceed 4H:1V.
3. The uphill boundary of the vegetated strip shall be delineated with clearing limits as specified in Section D.2.1.1.

Maintenance Standards

1. Any areas damaged by erosion or construction activity shall be seeded immediately and protected by mulch.
2. If more than 5 feet of the original vegetated strip width has had vegetation removed or is being eroded, sod must be installed using the standards for installation found in Section D.2.1.2.7.

If there are indications that concentrated flows are traveling across the buffer, surface water controls must be installed to reduce the flows entering the buffer, or additional perimeter protection must be installed.

D.2.1.3.4 TRIANGULAR SILT DIKE (GEOTEXTILE ENCASED CHECK DAM)

Code: TSD Symbol:

Purpose

Triangular silt dikes (TSDs) may be used as check dams, for perimeter protection, for temporary soil stockpile protection, for drop inlet protection, or as a temporary interceptor dike. Silt dikes, if attached to impervious surfaces with tack or other adhesive agent may also be used as temporary wheel wash areas, or concrete washout collection areas.

Conditions of Use

1. May be used for temporary check dams in ditches.
2. May be used on soil or pavement with adhesive or staples.
3. TSDs have been used to build temporary sediment ponds, diversion ditches, concrete washout facilities, curbing, water bars, level spreaders, and berms.

DRAFT

Design and Installation Specifications

1. TSDs must be made of urethane foam sewn into a woven geosynthetic fabric.
2. TSDs are triangular, 10 inches to 14 inches high in the center, with a 20-inch to 28-inch base. A 2-foot apron extends beyond both sides of the triangle along its standard section of 7 feet. A sleeve at one end allows attachment of additional sections as needed
3. Install TSDs with ends curved up to prevent water from flowing around the ends
4. Attach the TSDs and their fabric flaps to the ground with wire staples. Wire staples must be No. 11 gauge wire or stronger and shall be 200 mm to 300 mm in length.
5. When multiple units are installed, the sleeve of fabric at the end of the unit shall overlap the abutting unit and be stapled.
6. TSDs must be located and installed as soon as construction will allow.
7. TSDs must be placed perpendicular to the flow of water.
8. When used as check dams, the leading edge must be secured with rocks, sandbags, or a small key slot and staples.
9. When used in grass-lined ditches and swales, the TSD check dams and accumulated sediment shall be removed when the grass has matured sufficiently to protect the ditch or swale unless the slope of the swale is greater than 4 percent. The area beneath the TSD check dams shall be seeded and mulched immediately after dam removal.

Maintenance Standards

1. Triangular silt dikes shall be monitored for performance and sediment accumulation during and after each runoff producing rainfall event. Sediment shall be removed when it reaches one half the height of the silt dike.
2. Anticipate submergence and deposition above the triangular silt dike and erosion from high flows around the edges of the dike/dam. Immediately repair any damage or any undercutting of the dike/dam.

D.2.1.3.5 COMPOST BERMS

Code: COBE Symbol:

Purpose

Compost berms are an option to meet the requirements of perimeter protection. Compost berms may reduce the transport of sediment from a construction site by providing a temporary physical barrier to sediment and reducing the runoff velocities of overland flow. Compost berms trap sediment by filtering water passing through the berm and allowing water to pond, creating a settling area for solids behind the berm. Organic materials in the compost can also reduce concentrations of metals and petroleum hydrocarbons from construction runoff. Due to the increase in phosphorous seen in the effluent data from compost berms, they should be used with some cautions in areas that drain to phosphorus sensitive water bodies, and should only be used in Sensitive Lake watersheds, such as Lake Sammamish, with the approval from the City or the local jurisdiction.

Conditions of Use

1. Compost berms may be used in most areas requiring sediment or erosion control where runoff is in the form of sheet flow or in areas where silt fence is normally considered acceptable. Compost berms may be used in areas where migration of aquatic life such as turtles and salamanders are impeded by the use of silt fence.

DRAFT

2. Compost berms are not intended to treat concentrated flows, nor are they intended to treat substantial amounts of overland flow. Any concentrated flows must be conveyed via a drainage system to a sediment pond or trap.
3. For purposes of long-term sediment control objectives, berms may be seeded at the time of installation to create an additional vegetated filtering component.

Design and Installation Specifications

1. Compost berms shall be applied using a pneumatic blower device or equivalent, to produce a uniform cross-section and berm density.
2. Compost berms shall be triangular in cross-section. The ratio of base to height dimensions shall be 2:1.
3. The minimum size of a compost berm is a 2-foot base with a 1-foot height.
4. Compost berms shall be sized and spaced as indicated in the table below.

SLOPE	SLOPE	Maximum Slope Length or Berm Spacing (linear feet)	Berm Size Required (height x base width)
0% – 2%	Flatter than 50:1	250	1 ft x 2 ft
2% – 10%	50:1 – 10:1	125	1 ft x 2 ft
10% – 20%	10:1 – 5:1	100	1 ft x 2 ft
20% – 33%	5:1 – 3:1	75	1 ft x 2 ft
33% – 50%	3:1 – 2:1	50	1.5 ft x 3 ft

5. Compost berms shall not be used on slopes greater than 2H:1V.
6. Compost shall meet criteria in Reference Section 11-C of the *SWDM* except for the particle size distribution (see Bullet 8).
7. Compost shall be obtained from a supplier meeting the requirements in Reference Section 11-C.
8. Compost particle size distribution shall be as follows: 99% passing a 1 inch sieve, 90% passing a 3/4-inch sieve and a minimum of 70% greater than the 3/8-inch sieve. A total of 98% shall not exceed 3 inches in length.
9. Berms shall be placed on level contours to assist in dissipating flow into sheet flow rather than concentrated flows. Berms shall not be constructed to concentrate runoff or channel water. Sheet flow of water shall be perpendicular to the berm at impact. No concentrated flow shall be directed towards compost berms.
10. Where possible, berms shall be placed 5 feet or more from the toe of slopes to allow space for sediment deposition and collection.
11. In order to prevent water from flowing around the ends of the berms, the ends of the berm shall be constructed pointing upslope so the ends are at a higher elevation than the rest of the berm.
12. A compost blanket extending 10 to 15 feet above the berm is recommended where the surface above the berm is rutted or uneven, to reduce concentrated flow and promote sheet flow into the berm.

DRAFT

Maintenance Standards

1. Compost berms shall be regularly inspected to make sure they retain their shape and allow adequate flow-through of stormwater.
2. When construction is completed on site, the berms shall be dispersed for incorporation into the soil or left on top of the site for final seeding to occur.
3. Any damage to berms must be repaired immediately. Damage includes flattening, compacting, rills, eroded areas due to overtopping.
4. If concentrated flows are evident uphill of the berm, the flows must be intercepted and conveyed to a sediment trap or pond.
5. The uphill side of the berm shall be inspected for signs of the berm clogging and acting as a barrier to flows and causing channelization of flows parallel to the berm. If this occurs, replace the berm or remove the trapped sediment.
6. Sediment that collects behind the berm must be removed when the sediment is more than 6 inches deep.

D.2.1.3.6 COMPOST SOCKS

Code: COSO Symbol:

Purpose

Compost socks reduce the transport of sediment from a construction site by providing a temporary physical barrier to sediment-laden water and reducing the runoff velocities of overland flow. Compost socks trap sediment by filtering water that passes through the sock and allows water to pond behind the sock, creating a settling area for solids. Organic materials in the compost also may reduce metal and petroleum hydrocarbon concentrations in construction runoff. Compost socks function similarly to compost berms; however, because the compost is contained in a mesh tube, they are appropriate for both concentrated flow and sheet flow. Compost socks may be used to channel concentrated flow on hard surfaces.

Conditions of Use

1. Compost socks may be used in areas requiring sediment or erosion control where runoff is in the form of sheet flow or in areas that silt fence is normally considered acceptable. Compost socks may also be used in sensitive environmental areas where migration of aquatic life, including turtles, salamanders and other aquatic life may be impeded by the used of silt fence.
2. Compost socks are not intended to treat substantial amounts of overland flow. However, compost socks may be subjected to some ponding and concentrated flows. If intended primarily as a filtration device, the socks should be sized and placed so that flows do not overtop the socks.
3. For purposes of long term sediment control objectives, compost socks may be seeded at the time of installation to create an additional vegetated filtering component.

Design and Installation Specifications

1. Compost socks shall be produced using a pneumatic blower hose or equivalent to fill a mesh tube with compost to create a uniform cross-section and berm density.
2. Socks shall be filled so they are firmly – packed yet flexible. Upon initial filling, the socks shall be filled to have a round cross-section. Once placed on the ground, it is recommended to apply weight to the sock to improve contact with the underlying surface. This may cause the sock to assume an oval shape.
3. Compost socks shall be a minimum of 8 inches in diameter. Larger diameter socks are recommended for areas where ponding is expected behind the sock.

DRAFT

4. Compost socks shall not be used on slopes greater than 2H:1V.
5. Compost shall meet criteria in Reference Section 11-C of the *SWDM*, except for the particle size distribution (see Bullet 7).
6. Compost shall be obtained from a supplier meeting the requirements in Reference Section 11-C.
7. Compost particle size distribution shall be as follows: 99% passing a 1-inch sieve, 90% passing a 3/4-inch sieve and a minimum of 70% greater than the 3/8-inch sieve. A total of 98% shall not exceed 3 inches in length.
8. In order to prevent water from flowing around the ends of compost socks, the ends must be pointed upslope so the ends of the socks are at a higher elevation than the remainder of the sock.

Maintenance Standards

1. Compost socks shall be regularly inspected to make sure the mesh tube remains undamaged, the socks retain their shape, and allow adequate flow through of surface water. If the mesh tube is torn, it shall be repaired using twine, zip-ties, or wire. Large sections of damaged socks must be replaced. Any damage must be repaired immediately upon discovery of damage.
2. When the sock is no longer needed, the socks shall be cut open and the compost dispersed to be incorporated into the soil or left on top of the soil for final seeding to occur. The mesh material must be disposed of properly as solid waste. If spills of oil, antifreeze, hydraulic fluid, or other equipment fluids have occurred that have saturated the sock, the compost must be disposed of properly as a waste.
3. Sediment must be removed when sediment accumulations are within 3 inches of the top of the sock.

D.2.1.4 TRAFFIC AREA STABILIZATION

Unsurfaced entrances, roads, and parking areas used by construction traffic shall be stabilized to minimize erosion and tracking of sediment off site. Stabilized construction entrances shall be installed as the first step in clearing and grading. At the City's discretion, road and parking area stabilization is not required during the dry season (unless dust is a concern) or if the site is underlain by coarse-grained soils. Roads and parking areas shall be stabilized immediately after initial grading.

Purpose: The purpose of traffic area stabilization is to reduce the amount of sediment transported off site by construction vehicles and to reduce the erosion of areas disturbed by vehicle traffic. Sediment transported off site onto paved streets is a significant problem because it is difficult to effectively remove, and any sediment not removed ends up in the drainage system. Additionally, sediment on public right-of-way can pose a serious traffic hazard. Construction road and parking area stabilization is important because the combination of wet soil and heavy equipment traffic typically forms a slurry of easily erodible mud. Finally, stabilization also is an excellent form of dust control in the summer months.

When to Install: The construction entrance is to be installed as the first step in clearing and grading. Construction road stabilization shall occur immediately after initial grading of the construction roads and parking areas.

Measures to Use: There are two types of traffic area stabilization: (1) a stabilized construction entrance and (2) construction road/parking area stabilization. Both measures must be used as specified under "Conditions of Use" for each measure.

DRAFT

D.2.1.4.1 STABILIZED CONSTRUCTION ENTRANCE

Code: CE Symbol: 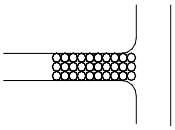

Purpose

Construction entrances are stabilized to reduce the amount of sediment transported onto paved roads by motor vehicles or runoff by constructing a stabilized pad of quarry spalls at entrances to construction sites.

Conditions of Use

Construction entrances shall be stabilized wherever traffic will be leaving a construction site and traveling on paved roads or other paved areas within 1,000 feet of the site. Access and exits shall be limited to one route if possible, or two for linear projects such as roadway where more than one access/exit is necessary for maneuvering large equipment.

For residential construction provide stabilized construction entrances for each residence in addition to the main subdivision entrance. Stabilized surfaces shall be of sufficient length/width to provide vehicle access/parking, based on lot size/configuration.

Design and Installation Specifications

1. See Figure D.2.1.4.A for details.
2. A separation geotextile shall be placed under the spalls to prevent fine sediment from pumping up into the rock pad. The geotextile shall meet the following standards:

Grab Tensile Strength (ASTM D4632)	200 lbs min.
Grab Tensile Elongation (ASTM D4632)	30% max.(woven)
Puncture Strength (ASTM D6241)	495 lbs min.
AOS (ASTM D4751)	20–45 (U.S. standard sieve size)

3. Do not use crushed concrete, cement, or calcium chloride for construction entrance stabilization because these products raise pH levels in stormwater and concrete discharge to surface waters of the State is prohibited.
4. Hog fuel (wood based mulch) may be substituted for or combined with quarry spalls in areas that will not be used for permanent roads. The effectiveness of hog fuel is highly variable, but it has been used successfully on many sites. It generally requires more maintenance than quarry spalls. Hog fuel is not recommended for entrance stabilization in urban areas. The inspector may at any time require the use of quarry spalls if the hog fuel is not preventing sediment from being tracked onto pavement or if the hog fuel is being carried onto pavement. Hog fuel is prohibited in permanent roadbeds because organics in the subgrade soils cause difficulties with compaction.
5. Fencing (see Section D.2.1.1) shall be installed as necessary to restrict traffic to the construction entrance.
6. Whenever possible, the entrance shall be constructed on a firm, compacted subgrade. This can substantially increase the effectiveness of the pad and reduce the need for maintenance.

Maintenance Standards

1. Quarry spalls (or hog fuel) shall be added if the pad is no longer in accordance with the specifications.
2. If the entrance is not preventing sediment from being tracked onto pavement, then alternative measures to keep the streets free of sediment shall be used. This may include street sweeping, an

DRAFT

increase in the dimensions of the entrance, or the installation of a wheel wash. If washing is used, it shall be done on an area covered with crushed rock, and wash water shall drain to a sediment trap or pond.

3. Any sediment that is tracked onto pavement shall be removed immediately by sweeping. The sediment collected by sweeping shall be removed or stabilized on site. The pavement shall not be cleaned by washing down the street, except when sweeping is ineffective and there is a threat to public safety. If it is necessary to wash the streets, a small sump must be constructed. The sediment would then be washed into the sump where it can be controlled. Wash water must be pumped back onto the ***site*** and cannot discharge to systems tributary to surface waters.
4. Any quarry spalls that are loosened from the pad and end up on the roadway shall be removed immediately.
5. If vehicles are entering or exiting the site at points other than the construction entrance(s), fencing (see Section D.2.1.1) shall be installed to control traffic.

FIGURE D.2.1.4.A SCHEMATIC REPRESENTATION OF A STABILIZED CONSTRUCTION ENTRANCE

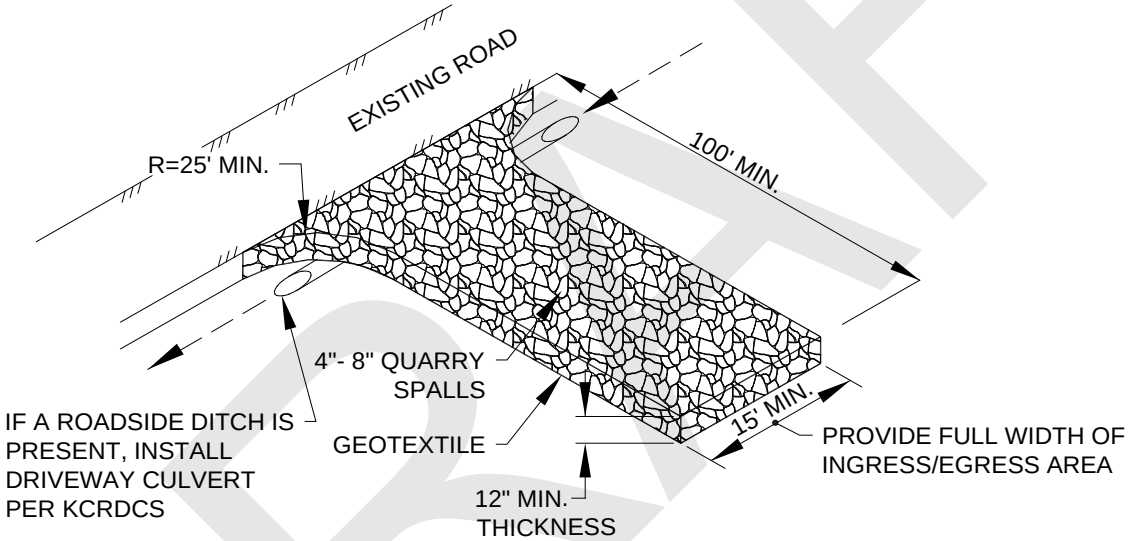

NOTES:

- PER KING COUNTY ROAD DESIGN AND CONSTRUCTION STANDARDS (KCRDCS), DRIVEWAYS SHALL BE PAVED TO EDGE OF R-O-W PRIOR TO INSTALLATION OF THE CONSTRUCTION ENTRANCE TO AVOID DAMAGING OF THE ROADWAY.
- IT IS RECOMMENDED THAT THE ENTRANCE BE CROWNED SO THAT RUNOFF DRAINS OFF THE PAD.

D.2.1.4.2 CONSTRUCTION ROAD/PARKING AREA STABILIZATION

Code: CRS Symbol: 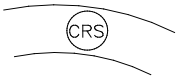

Purpose

Stabilizing subdivision roads, parking areas and other onsite vehicle transportation routes immediately after grading reduces erosion caused by construction traffic or runoff.

DRAFT

Conditions of Use

1. Roads or parking areas shall be stabilized wherever they are constructed, whether permanent or temporary, for use by construction traffic.
2. Fencing (see Section D.2.1.1) shall be installed, if necessary, to limit the access of vehicles to only those roads and parking areas that are stabilized.

Design and Installation Specifications

1. A 6-inch depth of 2- to 4-inch **crushed rock, gravel base, or crushed surfacing base course** shall be applied immediately after grading or utility installation. A 4-inch course of asphalt treated base (ATB) may also be used, or the road/parking area may be paved. It may also be possible to use cement or calcium chloride for soil stabilization. If the area will not be used for permanent roads, parking areas, or structures, a 6-inch depth of hog fuel may also be used, but this is likely to require more maintenance. Whenever possible, construction roads and parking areas shall be placed on a firm, compacted subgrade. *Note: If the area will be used for permanent road or parking installation later in the project, the subgrade will be subject to inspection.*
2. **Temporary road gradients** shall not exceed 15 percent. Roadways shall be carefully graded to drain transversely. Drainage ditches shall be provided on each side of the roadway in the case of a crowned section, or on one side in the case of a super-elevated section. Drainage ditches shall be designed in accordance with the standards given in Section D.2.1.6.4 and directed to a sediment pond or trap.
3. Rather than relying on ditches, it may also be possible to **grade the road** so that runoff sheet-flows into a heavily vegetated area with a well-developed topsoil. Landscaped areas are not adequate. If this area has at least 50 feet of vegetation, then it is generally preferable to use the vegetation to treat runoff, rather than a sediment pond or trap. The 50 feet shall not include vegetated wetlands. If runoff is allowed to sheet flow through adjacent vegetated areas, it is vital to design the roadways and parking areas so that no concentrated runoff is created.
4. In order to control construction traffic, the City may require that **signs** be erected on site informing construction personnel that vehicles, other than those performing clearing and grading, are restricted to stabilized areas.
5. If construction roads do not adequately reduce trackout to adjacent property or roadways, a wheel wash system will be required.

Maintenance Standards

Crushed rock, gravel base, hog fuel, etc., shall be added as required to maintain a stable driving surface and to stabilize any areas that have eroded.

D.2.1.4.3 WHEEL WASH

Code: WW Symbol: 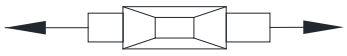

Purpose

Wheel wash systems reduce the amount of sediment transported onto paved roadways and into surface water systems by construction vehicles.

Conditions of Use

When a stabilized construction entrance is not preventing sediment from being tracked onto pavement:

- Wheel washing is generally an effective erosion and sediment control method and BMP when installed with careful attention to topography. For example, a wheel wash can be detrimental if installed at the top of a slope abutting a right-of-way where the water from the dripping truck wheels and undercarriage can run unimpeded into the street.

DRAFT

- Pressure washing combined with an adequately sized and properly surfaced wash pad with direct drainage discharge to a large 10-foot x 10-foot sump can be very effective.

Design and Installation Specifications

A suggested detail is shown in Figure D.2.1.4.B.

1. A minimum of 6 inches of asphalt treated base (ATB) over crushed base material or 8 inches over a good subgrade is recommended to pave the wheel wash area.
2. Use a low clearance truck to test the wheel wash before paving. Either a belly dump or lowboy will work well to test clearance.
3. Keep the water level from 12 to 14 inches deep to avoid damage to truck hubs and filling the truck tongues with water.
4. Midpoint spray nozzles are only needed in very muddy conditions.
5. Wheel wash systems should be designed with a small grade change, 6 to 12 inches for a 10-foot-wide pond, to allow sediment to flow to the low side of the pond and to help prevent re-suspension of sediment.
6. A drainpipe with a 2- to 3-foot riser should be installed on the low side of the wheel wash pond to allow for easy cleaning and refilling. Polymers may be used to promote coagulation and flocculation in a closed-loop system.
7. Polyacrylamide (PAM) added to the wheel washwater at a rate of 0.25 to 0.5 pounds per 1,000 gallons of water increases effectiveness and reduces cleanup time. If PAM is already being used for dust or erosion control and is being applied by a water truck, the same truck may be used to change the washwater.

Maintenance Standards

1. The wheel wash should start out each day with clean, fresh water.
2. The washwater should be changed a minimum of once per day. On large earthwork jobs where more than 10 to 20 trucks per hour are expected, the washwater will need to be changed more often.
3. Wheel wash or tire bath wastewater shall be discharged to a separate onsite treatment system, such as a closed-loop recirculation system or land application, or to the sanitary sewer system with proper approval and/or permits from King County and the City of Renton.

DRAFT

FIGURE D.2.1.4.B WHEEL WASH AND PAVED CONSTRUCTION ENTRANCE

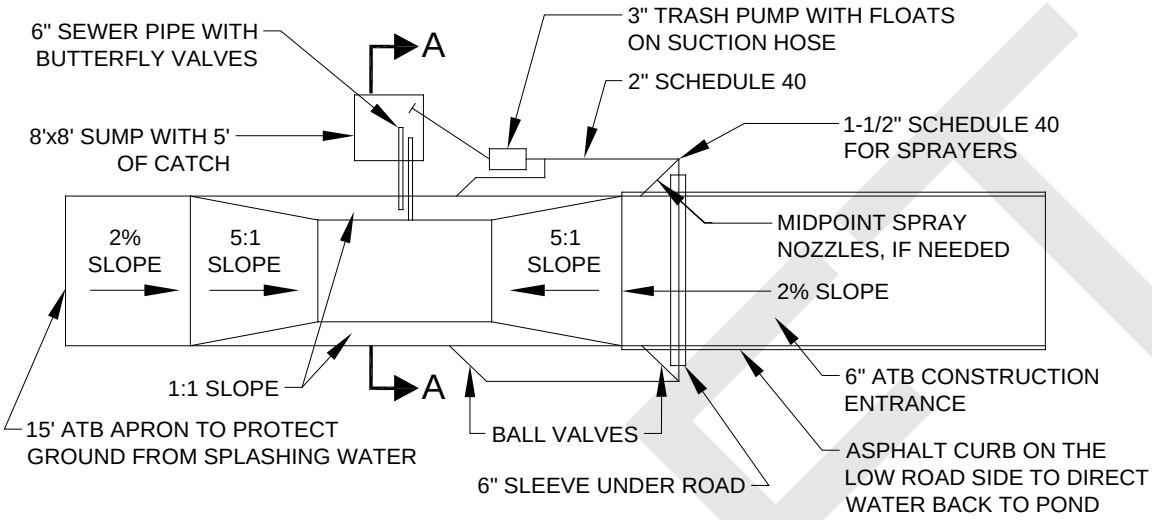

PLAN VIEW
NTS

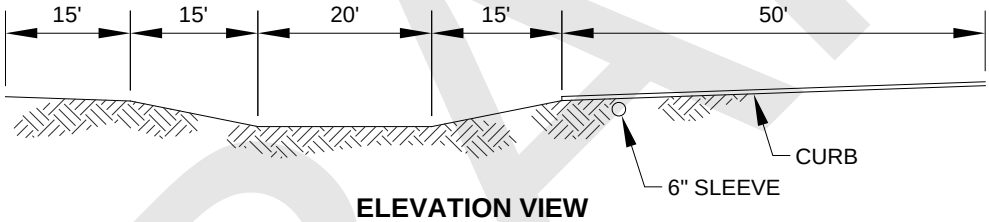

ELEVATION VIEW
NTS

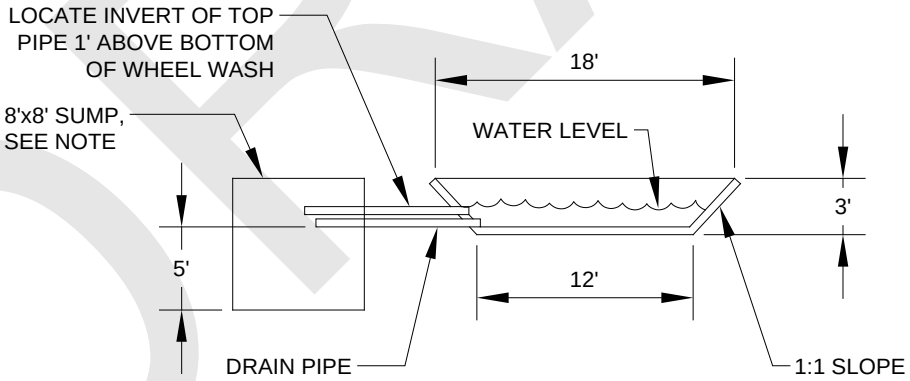

NOTE:
BUILD 8'x8' SUMP TO ACCOMODATE CLEANING BY TRACKHOE.

SECTION A-A
NTS

DRAFT

D.2.1.5 SEDIMENT RETENTION

Surface water collected from disturbed areas of the site shall be routed through a sediment pond or trap prior to release from the site. An exception is for areas at the perimeter of the site with drainage areas small enough to be treated solely with perimeter protection (see Section D.2.1.3). Also, if the soils and topography are such that no offsite discharge of surface water is anticipated up to and including the developed 2-year runoff event, sediment ponds and traps are not required. A 10-year peak flow using the approved model with 15-minute time steps shall be used for sediment pond/trap sizing if the project size, expected timing and duration of construction, or downstream conditions warrant a higher level of protection (see below). At the City's discretion, sites may be worked during the dry season without sediment ponds and traps if there is some other form of protection of surface waters, such as a 100-foot forested buffer between the disturbed areas and adjacent surface waters. For small sites, use the criteria defined in Section D.2.1.3, Perimeter Protection to determine minimum flow path length. If the site work has to be extended into the wet season, a back-up plan must be identified in the CSWPP plan and implemented. Protection of catch basins is required for inlets that are likely to be impacted by sediment generated by the project and that do not drain to an onsite sediment pond or trap. Sediment retention facilities shall be installed prior to grading of any contributing area and shall be located so as to avoid interference with the movement of juvenile salmonids attempting to enter off-channel areas or drainages.

Purpose: The purpose of sediment retention facilities is to remove sediment from runoff generated from disturbed areas.

When to Install: The facilities shall be constructed as the first step in the clearing and grading of the site. The surface water conveyances may then be connected to the facilities as site development proceeds.

Measures to Use: There are three sediment retention measures in this section. The first two, sediment traps and ponds, serve the same function but for different size catchments. All runoff from disturbed areas must be routed through a trap or pond except for very small areas at the perimeter of the site small enough to be treated solely with perimeter protection (see Section D.2.1.3). The third measure is for catch basin protection. It is only to be used in limited circumstances and is not a primary sediment treatment facility. It is only intended as a backup in the event of failure of other onsite systems.

Use of Permanent Drainage Facilities: All projects that are constructing permanent facilities for runoff quantity control are strongly encouraged to use the rough-graded or final-graded permanent facilities for ponds and traps. This includes combined facilities and infiltration facilities. When permanent facilities are used as temporary sedimentation facilities, the surface area requirements of sediment traps (for drainages less than 3 acres) or sediment ponds (more than 3 acres) must be met. If the surface area requirements are larger than the surface area of the permanent facility, then the pond shall be enlarged to comply with the surface area requirement. The permanent pond shall also be divided into two cells as required for sediment ponds. Either a permanent control structure or the temporary control structure described in Section D.2.1.5.2 may be used. If a permanent control structure is used, it may be advisable to partially restrict the lower orifice with gravel to increase residence time while still allowing dewatering of the pond.

If infiltration facilities are to be used, the sides and bottom of the facility must only be rough excavated to a minimum of three feet above final grade. Excavation should be done with a backhoe working at "arm's length" to minimize disturbance and compaction of the infiltration surface. Additionally, any required pretreatment facilities shall be fully constructed prior to any release of sediment-laden water to the facility. Pretreatment and shallow excavation are intended to prevent the clogging of soil with fines. Final grading of the infiltration facility shall occur only when all contributing drainage areas are fully stabilized (see Section D.2.4.5).

Selection of the Design Storm: In most circumstances, the developed condition 2-year peak flow using the approved model with 15-minute time steps is sufficient for calculating surface area for ponds and traps and for determining exemptions from the sediment retention and surface water collection requirements (Sections D.2.1.5 and D.2.1.6, respectively). In some circumstances, however, the approved model 10-year 15-minute peak flow should be used. Examples of such circumstances include the following:

- Sites that are within ¼ mile of salmonid streams, wetlands, and designated sensitive lakes such as Lake Sammamish
- Sites where significant clearing and grading is likely to occur during the wet season
- Sites with downstream erosion or sedimentation problems.

Natural Vegetation: Whenever possible, sediment-laden water shall be discharged into onsite, relatively level, vegetated areas. This is the only way to effectively remove fine particles from runoff. This can be particularly useful after initial treatment in a sediment retention facility. The areas of release must be evaluated on a site-by-site basis in order to determine appropriate locations for and methods of releasing runoff. Vegetated wetlands shall not be used for this purpose. Frequently, it may be possible to pump water from the collection point at the downhill end of the site to an upslope vegetated area. Pumping shall only augment the treatment system, not replace it because of the possibility of pump failure or runoff volume in excess of pump capacity.

D.2.1.5.1 SEDIMENT TRAP

Code: ST Symbol: 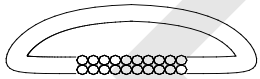

Purpose

Sediment traps remove sediment from runoff originating from disturbed areas of the site. Sediment traps are typically designed to only remove sediment as small as medium silt (0.02 mm). As a consequence, they usually only result in a small reduction in turbidity.

Conditions of Use

A sediment trap shall be used where the contributing drainage area is 3 acres or less.

Design and Installation Specifications

1. See Figure D.2.1.5.A for details.
2. If permanent runoff control facilities are part of the project, they should be used for sediment retention (see "**Use of Permanent Drainage Facilities**" in Section D.2.1.5).
3. To determine the trap geometry, first calculate the design surface area (*SA*) of the trap, measured at the invert of the weir. Use the following equation:

$$SA = FS(Q_2/V_S)$$

where Q^2 = Design inflow (cfs) from the contributing drainage area based on the developed condition 2-year or 10-year peak discharge using the approved model with 15-minute time steps as computed in the hydrologic analysis. The approved model 10-year 15-minute peak flow shall be used if the project size, expected timing and duration of construction, or downstream conditions warrant a higher level of protection, or if the pond discharge path leaves the ***site*** (note provisions must made to prevent increases in the existing site conditions 2-year and 10-year runoff peaks discharging from the project ***site*** during construction, see Section D.3.9, Flow Control). If no hydrologic analysis is required, the Rational Method may be used (Section 3.2.1 of the *SWDM*).

V_S = The settling velocity (ft/sec) of the soil particle of interest. The 0.02 mm (medium silt) particle with an assumed density of 2.65 g/cm^3 has been selected as the particle of interest and has a settling velocity (V_S) of 0.00096 ft/sec.

FS = A safety factor of 2 to account for non-ideal settling.

Therefore, the equation for computing surface area becomes:

$$SA = 2 \times Q_2/0.00096 \quad \text{or} \quad 2080 \text{ square feet per cfs of inflow}$$

DRAFT

Note: Even if permanent facilities are used, they must still have a surface area that is at least as large as that derived from the above formula. If they do not, the pond must be enlarged.

4. To aid in determining sediment depth, all traps shall have a staff gage with a prominent mark one foot above the bottom of the trap.

Maintenance Standards

1. Sediment shall be removed from the trap when it reaches 1 foot in depth.
2. Any damage to the trap embankments or slopes shall be repaired.

FIGURE D.2.1.5.A SEDIMENT TRAP

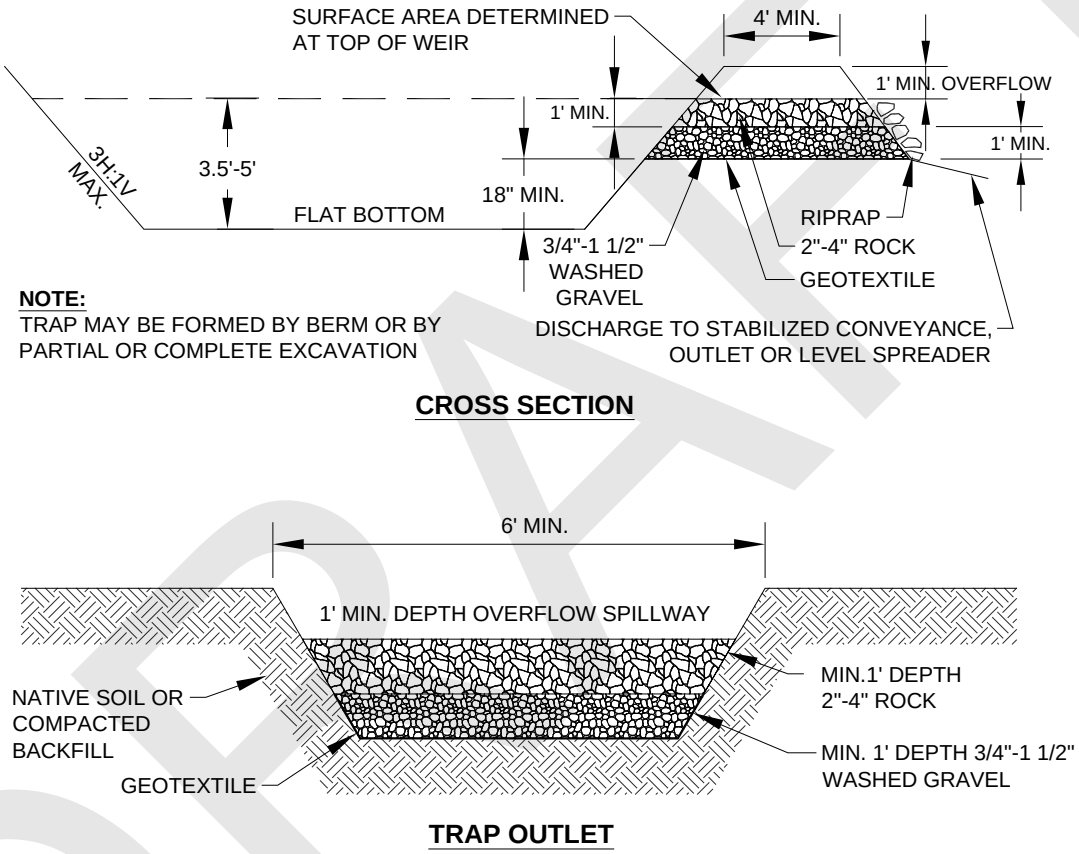

DRAFT

D.2.1.5.2 SEDIMENT POND

Code: SP Symbol: 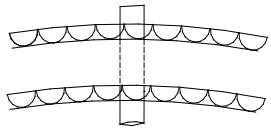

Purpose

Sediment ponds remove sediment from runoff originating from disturbed areas of the site. Sediment ponds are typically designed to only remove sediment as small as medium silt (0.02 mm). As a consequence, they usually reduce turbidity only slightly.

Conditions of Use

A sediment pond shall be used where the contributing drainage area is 3 acres or more.

Design and Installation Specifications

1. See Figure D.2.1.5.B, Figure D.2.1.5.C, and Figure D.2.1.5.D for details.
2. If permanent runoff control facilities are part of the project, they should be used for sediment retention (see "**Use of Permanent Drainage Facilities**" in Section D.2.1.5).

Determining Pond Geometry

1. Obtain the discharge from the hydrologic calculations for the 2-year and 10-year peak flows using the approved model with 15-minute time steps (Q_2 and Q_{10}). The approved model 10-year 15-minute peak flow shall be used if the project size, expected timing and duration of construction, or downstream conditions warrant a higher level of protection, or if the pond discharge path leaves the ***site*** (note provisions must made to prevent increases in the existing site conditions 2-year and 10-year runoff peaks discharging from the project ***site*** during construction, see Section D.3.9, Flow Control). If no hydrologic analysis is required, the Rational Method may be used (Section 3.2.1 of the *SWDM*).
2. Determine the required surface area at the top of the riser pipe with the equation:

   $$SA = 2 \times Q_{10}/0.00096 \quad \text{or} \quad 2080 \text{ square feet per cfs of inflow}$$

   See Section D.2.1.5.1 for more information on the derivation of the surface area calculation.
3. The basic geometry of the pond can now be determined using the following design criteria:
   - Required surface area *SA* (from Step 2 above) at top of riser
   - Minimum 3.5-foot depth from top of riser to bottom of pond
   - Maximum 3:1 interior side slopes and maximum 2:1 exterior slopes. The interior slopes may be increased to a maximum of 2:1 if fencing is provided at or above the maximum water surface
   - One foot of freeboard between the top of the riser and the crest of the emergency spillway
   - Flat bottom
   - Minimum one foot deep spillway
   - Length-to-width ratio between 3:1 and 6:1.

Sizing of Discharge Mechanisms

Principal Spillway: Determine the required diameter for the principal spillway (riser pipe). The diameter shall be the minimum necessary to pass the developed condition 10-year peak flow using the approved model with 15-minute time steps (Q_{10}). Use Figure 5.1.4.H (*SWDM* Chapter 5) to determine this diameter (*h* = one foot). *Note: A permanent control structure may be used instead of a temporary riser.*

Emergency Overflow Spillway: Determine the required size and design of the emergency overflow spillway for the developed condition 100-year approved model 15-minute peak flow using the procedure in Section 5.1.1 ("Emergency Overflow Spillway" subsection) of the *SWDM*.

DRAFT

Dewatering Orifice: Determine the size of the dewatering orifice(s) (minimum 1-inch diameter) using a modified version of the discharge equation for a vertical orifice and a basic equation for the area of a circular orifice.

1. Determine the required area of the orifice with the following equation:

$$A_o = \frac{A_s (2h)^{0.5}}{0.6\text{x}3600Tg^{0.5}} = 4.81(10^{-6})A_s\sqrt{h}$$

where
- Ao = orifice area (square feet)
- As = pond surface area (square feet)
- h = head of water above orifice (height of riser in feet)
- T = dewatering time (24 hours)
- g = acceleration of gravity (32.2 feet/second^2)

2. Convert the required surface area to the required diameter *D* (inches) of the orifice:

$$D = 24\text{x}\sqrt{\frac{A_o}{\pi}} = 13.54\text{x}\sqrt{A_o}$$

3. The vertical, perforated tubing connected to the dewatering orifice must be at least 2 inches larger in diameter than the orifice to improve flow characteristics. The size and number of perforations in the tubing should be large enough so that the tubing does not restrict flow. The flow rate should be controlled by the orifice.

Additional Design Specifications

- The **pond shall be divided** into two roughly equal volume cells by a permeable divider that will reduce turbulence while allowing movement of water between cells. The divider shall be at least one-half the height of the riser and a minimum of one foot below the top of the riser. Wire-backed, 2- to 3-foot high, extra strength filter fabric (see Section D.2.1.3.1) supported by treated 4″ x 4″s may be used as a divider. Alternatively, staked straw bales wrapped with filter fabric (geotextile) may be used.
- If the pond is more than 6 feet deep, a different mechanism must be proposed. A riprap embankment is one acceptable method of separation for deeper ponds. Other designs that satisfy the intent of this provision are allowed as long as the divider is permeable, structurally sound, and designed to prevent erosion under or around the barrier.
- To aid in determining sediment depth, **one-foot intervals** shall be prominently marked on the riser.
- If an **embankment** of more than 6 feet is proposed, the pond must comply with the criteria under "Embankments" in Section 5.1.1 of the *Surface Water Design Manual*.

Maintenance Standards

1. Sediment shall be removed from the pond when it reaches 1 foot in depth.
2. Any damage to the pond embankments or slopes shall be repaired.

DRAFT

FIGURE D.2.1.5.B SEDIMENT POND PLAN VIEW

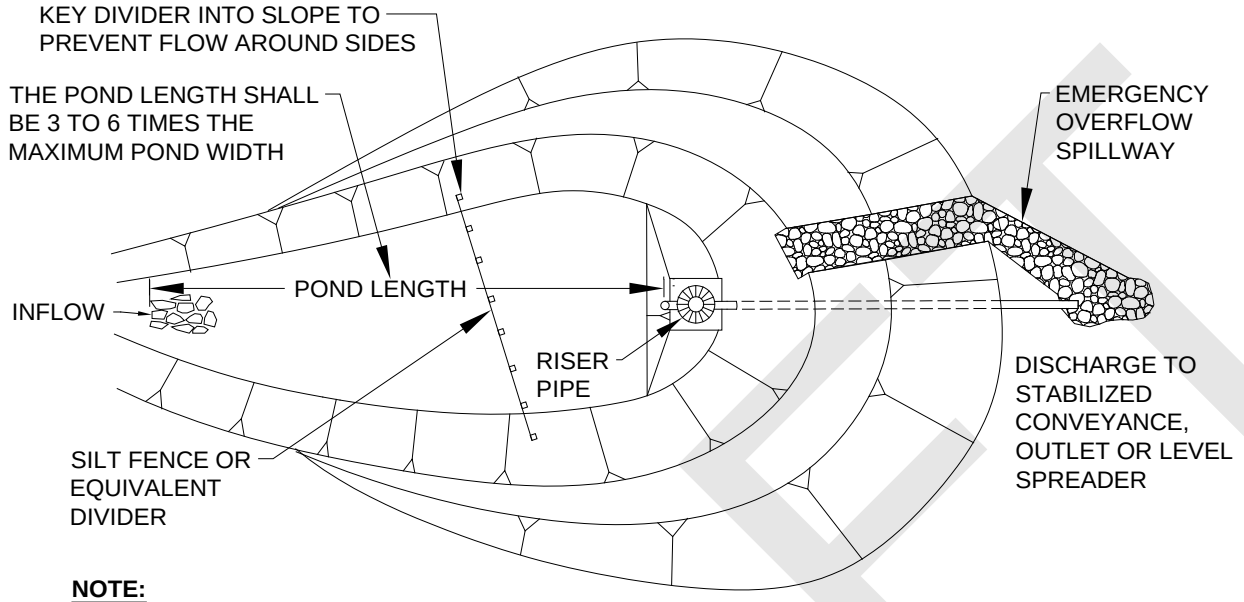

NOTE:
POND MAY BE FORMED BY BERM OR BY PARTIAL OR COMPLETE EXCAVATION

FIGURE D.2.1.5.C SEDIMENT POND CROSS SECTION

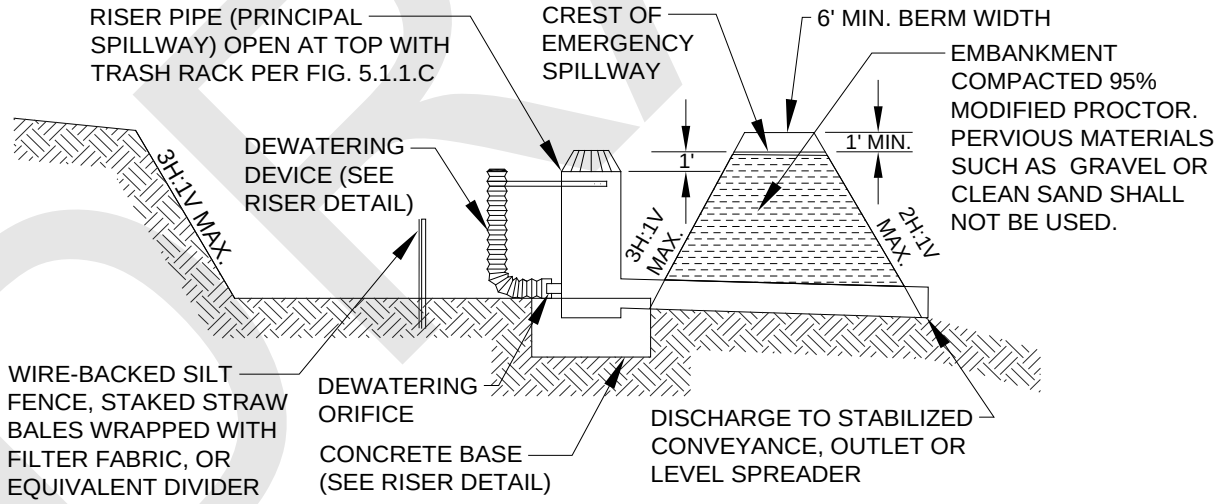

DRAFT

FIGURE D.2.1.5.D SEDIMENT POND RISER DETAIL

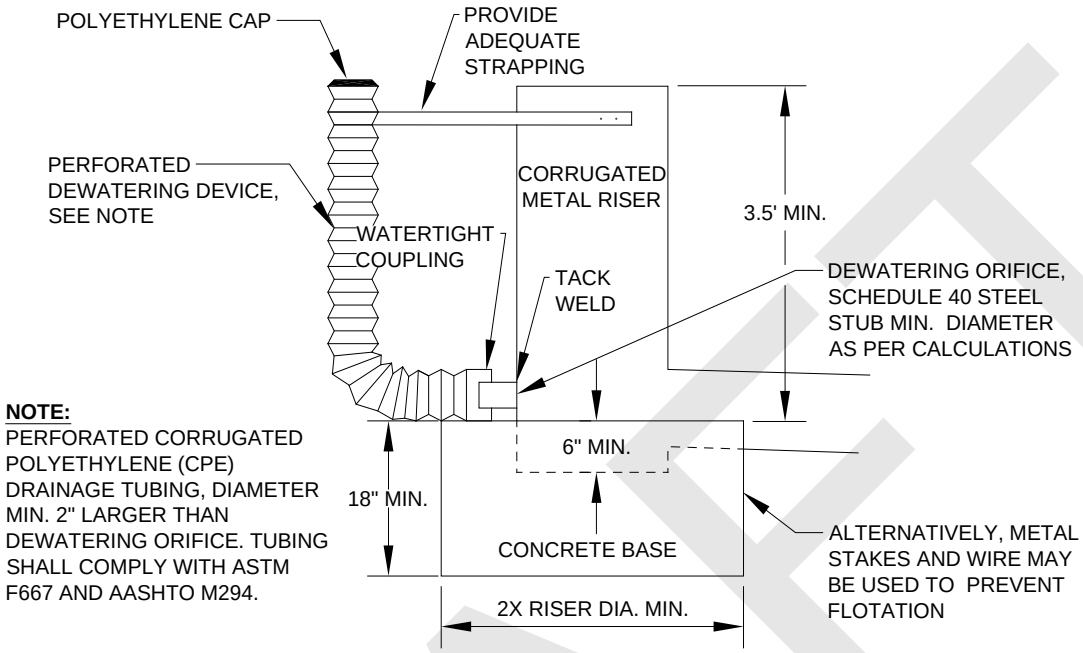

D.2.1.5.3 STORM DRAIN INLET PROTECTION

Code: FFP or CBI or CBP Symbol: or or

Purpose

Storm drain inlets are protected to prevent coarse sediment from entering storm drainage systems. Temporary devices around storm drains assist in improving the quality of water discharged to inlets or catch basins by ponding sediment-laden water. These devices are effective only for relatively small drainage areas.

Conditions of Use

1. Protection shall be provided for all storm drain inlets downslope and within 500 feet of a disturbed or construction area, unless the runoff that enters the catch basin will be conveyed to a sediment pond or trap.
2. Inlet protection may be used anywhere at the applicant's discretion to protect the drainage system. This will, however, require more maintenance, and it is highly likely that the drainage system will still require some cleaning.
3. The contributing drainage area must not be larger than one acre.

Design and Installation Specifications

1. There are many options **for protecting storm drain inlets**. Two commonly used options are filter fabric protection and catch basin inserts. *Filter fabric protection* (see Figure D.2.1.5.E) is filter fabric (geotextile) placed *over* the grate. This method is generally very ineffective and requires intense maintenance efforts. *Catch basin inserts* (see Figure D.2.1.5.F) are manufactured devices that nest inside a catch basin. This method also requires a high frequency of maintenance to be effective. Both options provide adequate protection, but filter fabric is likely to result in ponding of water above the catch basin, while the insert will not. Thus, filter fabric is only allowed where ponding will not be a traffic concern and where slope erosion will not result if the curb is overtopped by ponded water.

DRAFT

Trapping sediment in the catch basins is unlikely to improve the water quality of runoff if it is treated in a pond or trap because the coarse particles that are trapped at the catch basin settle out very quickly in the pond or trap. **Catch basin protection normally only improves water quality where there is no treatment facility downstream**. In these circumstances, catch basin protection is an important last line of defense. It is not, however, a substitute for preventing erosion.

The placement of filter fabric under grates is generally prohibited and the use of filter fabric over grates is strictly limited and discouraged.

2. It is sometimes possible to construct a small sump around the catch basin before final surfacing of the road. This is allowed because it can be a very effective method of sediment control.

3. Block and gravel filters, gravel and wire mesh filter barriers, and bag barriers filled with various filtering media placed around catch basins can be effective when the drainage area is 1 acre or less and flows do not exceed 0.5 cfs. It is necessary to allow for overtopping to prevent flooding. Many manufacturers have various inlet protection filters that are very effective in keeping sediment-laden water from entering the storm drainage system. The following are examples of a few common methods.

   a) **Block and gravel filters** (Figure D.2.1.5.G) are a barrier formed around an inlet with standard concrete block and gravel, installed as follows:

      - Height is 1 to 2 feet above the inlet.
      - Recess the first row of blocks 2 inches into the ground for stability.
      - Support subsequent rows by placing a 2x4 through the concrete block opening.
      - Do not use mortar.
      - Lay some blocks in the bottom row on their side for dewatering the pooled water.
      - Place cloth or mesh with ½ inch openings over all block openings.
      - Place gravel below the top of blocks on slopes of 2:1 or flatter.
      - An alternate design is a gravel donut.

   b) **Gravel and wire mesh filters** consist of a gravel barrier placed over the top of an inlet. This structure generally does not provide overflow. Install as follows:

      - Cloth or comparable wire mesh with ½ inch openings is placed over inlet.
      - Coarse aggregate covers the cloth or mesh.
      - Height/depth of gravel should be 1 foot or more, 18 inches wider than inlet on all sides.

   c) **Curb inlet protection with a wooden weir** is a barrier formed around an inlet with a wooden frame and gravel, installed as follows:

      - Construct a frame and attach wire mesh (½ inch openings) and filter fabric to the frame.
      - Pile coarse washed aggregate against the wire/fabric.
      - Place weight on frame anchors.

   d) **Curb and gutter sediment barriers** (Figure D.2.1.5.H) consist of sandbags or rock berms (riprap and aggregate) 3 feet high and 3 feet wide in a horseshoe shape, installed as follows:

      - Bags of either burlap or woven geotextile fabric, filled with a variety of media such as gravel, wood chips, compost or sand stacked tightly allows water to pond and allows sediment to separate from runoff.
      - Leave a “one bag gap” in the top row of the barrier to provide a spillway for overflow.
      - Construct a horseshoe shaped berm, faced with coarse aggregate if using riprap, 3 x 3 and at least 2 feet from the inlet.
      - Construct a horseshoe shaped sedimentation trap on the outside of the berm to sediment trap standards for protecting a culvert inlet.

DRAFT

4. **Excavated drop inlet sediment traps** are appropriate where relatively heavy flows are expected and overflow capability is needed. If emergency overflow is provided, additional end-of-pipe treatment may be required. Excavated drop inlets consist of an excavated impoundment area around a storm drain. Sediment settles out of the stormwater prior to enter the drain. Install according to the following specifications:
   a) The impoundment area should have a depth of 1 to 2 feet measured from the crest of the inlet structure.
   b) Side slopes of the excavated area must be no steeper than 2:1.
   c) Minimum volume of the excavated area should be 35 cubic yards.
   d) Install provisions for draining the area to prevent standing water problems.
   e) Keep the area clear of debris.
   f) Weep holes may be drilled into the side of the inlet.
   g) Protect weep holes with wire mesh and washed aggregate.
   h) Weep holes must be sealed when removing and stabilizing excavated area.
   i) A temporary dike may be necessary on the down slope side of the structure to prevent bypass flow.

Maintenance Standards

1. Any accumulated sediment on or around inlet protection shall be removed immediately. Sediment shall not be removed with water, and all sediment must be disposed of as fill on site or hauled off site.
2. Any sediment in the catch basin insert shall be removed when the sediment has filled one-third of the available storage. The filter media for the insert shall be cleaned or replaced at least monthly.
3. Regular maintenance is critical for all forms of catch basin/inlet protection. Unlike many forms of protection that fail gradually, catch basin protection will fail suddenly and completely if not maintained properly.

FIGURE D.2.1.5.E FILTER FABRIC PROTECTION

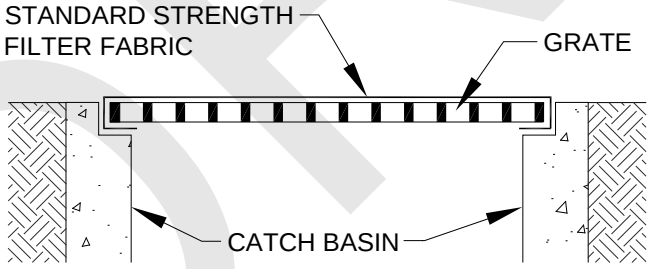

NOTE: ONLY TO BE USED WHERE PONDING OF WATER ABOVE THE CATCH BASIN WILL NOT CAUSE TRAFFIC PROBLEMS AND WHERE OVERFLOW WILL NOT RESULT IN EROSION OF SLOPES.

DRAFT

FIGURE D.2.1.5.F CATCH BASIN INSERT

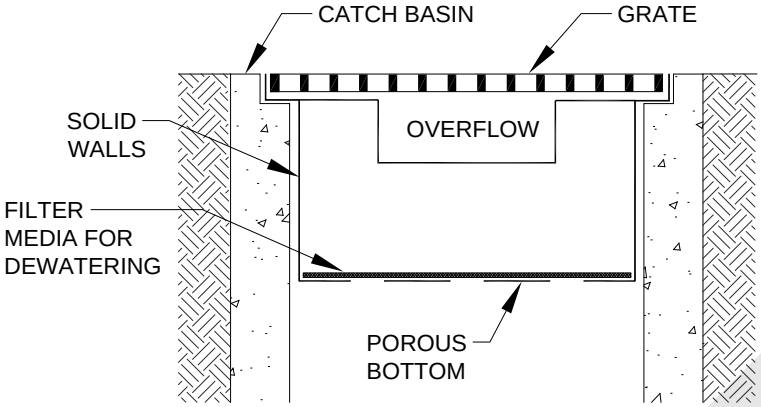

NOTE: THIS DETAIL IS ONLY SCHEMATIC. ANY INSERT IS ALLOWED THAT HAS:

- A MIN. 0.5 C.F. OF STORAGE,
- THE MEANS TO DEWATER THE STORED SEDIMENT,
- AN OVERFLOW, AND
- CAN BE EASILY MAINTAINED.

DRAFT

FIGURE D.2.1.5.G BLOCK AND GRAVEL CURB INLET PROTECTION

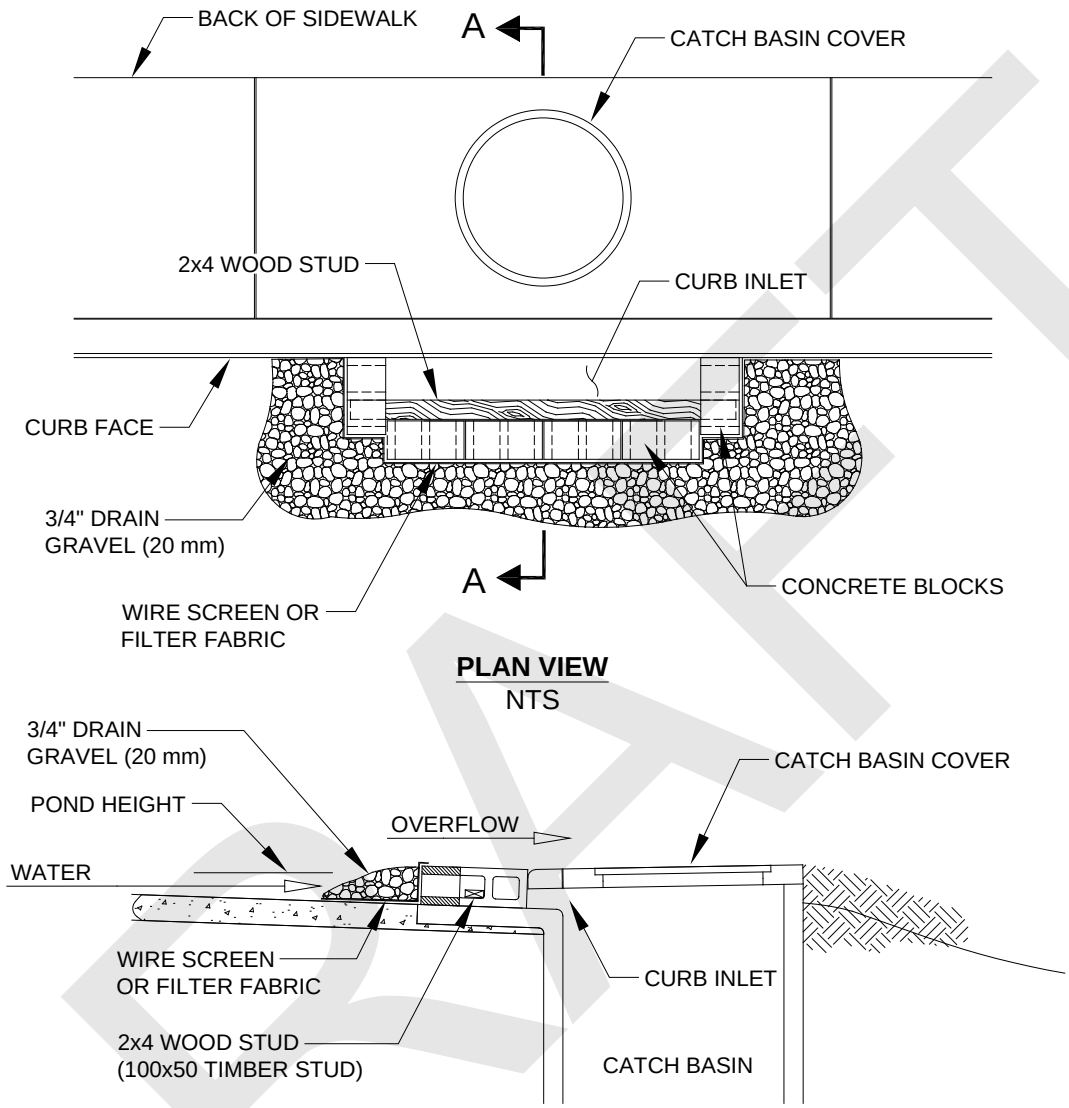

PLAN VIEW
NTS

SECTION A-A
NTS

NOTES:

1. USE BLOCK AND GRAVEL TYPE SEDIMENT BARRIER WHEN CURB INLET IS LOCATED IN GENTLY SLOPING SEGMENT, WHERE WATER CAN POND AND ALLOW SEDIMENT TO SEPARATE FROM RUNOFF.
2. BARRIER SHALL ALLOW FOR OVERFLOW FROM SEVERE STORM EVENT.
3. INSPECT BARRIERS AND REMOVE SEDIMENT AFTER EACH STORM EVENT. SEDIMENT AND GRAVEL MUST BE REMOVED FROM THE TRAVELED WAY IMMEDIATELY.

BLOCK AND GRAVEL CURB INLET PROTECTION
NTS

DRAFT

FIGURE D.2.1.5.H CURB AND GUTTER BARRIER PROTECTION

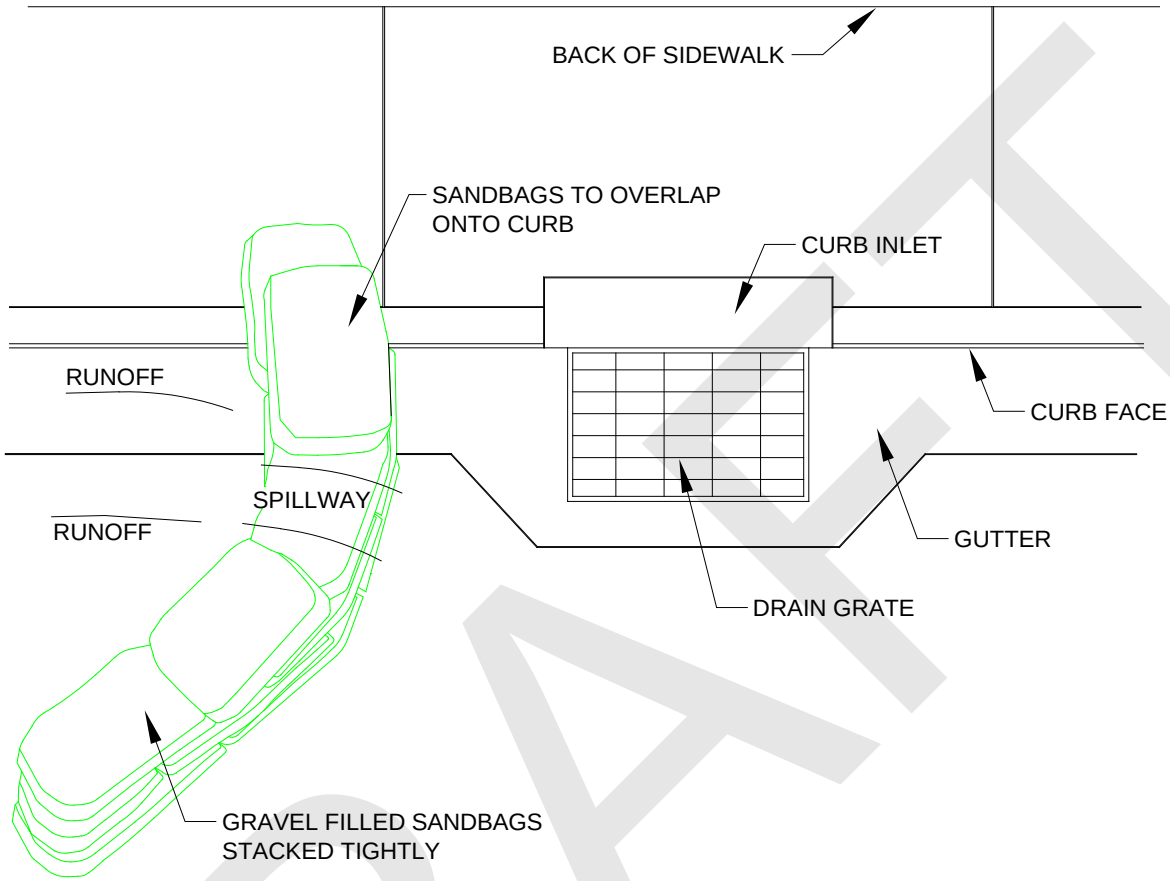

PLAN VIEW
NTS

NOTES:

1. PLACE CURB-TYPE SEDIMENT BARRIERS ON GENTLY SLOPING STREET SEGMENTS, WHERE WATER CAN POND AND ALLOW SEDIMENT TO SEPARATE FROM RUNOFF.
2. SANDBAGS OF EITHER BURLAP OR WOVEN GEOTEXTILE FABRIC ARE FILLED WITH GRAVEL, LAYERED AND PACKED TIGHTLY.
3. LEAVE A ONE-SANDBAG GAP IN THE TOP ROW TO PROVIDE A SPILLWAY FOR OVERFLOW.
4. INSPECT BARRIERS AND REMOVE SEDIMENT AFTER EACH STORM EVENT. SEDIMENT AND GRAVEL MUST BE REMOVED FROM THE TRAVELED WAY IMMEDIATELY.

CURB AND GUTTER BARRIER
NTS

DRAFT

D.2.1.6 SURFACE WATER COLLECTION

All surface water from disturbed areas shall be intercepted, conveyed to a sediment pond or trap, and discharged downslope of any disturbed areas. An exception is for areas at the perimeter of the site with drainage areas small enough to be treated solely with perimeter protection (see Section D.2.1.3). Also, if the soils and topography are such that no offsite discharge of surface water is anticipated up to and including the developed 2-year runoff event, surface water controls are not required. A 10-year approved model 15-minute peak flow shall be used for sizing surface water controls if the project size, expected timing and duration of construction, or downstream conditions warrant a higher level of protection (see the introduction to Section D.2.1.5). At the City's discretion, sites may be worked during the dry season without surface water controls, if there is some other form of protection of surface waters, such as a 100-foot forested buffer between the disturbed areas and adjacent surface waters. Significant sources of upslope surface water that drain onto disturbed areas shall be intercepted and conveyed to a stabilized discharge point downslope of the disturbed areas. Surface water controls shall be installed concurrently with rough grading.

Purpose: The purpose of surface water control is to collect and convey surface water so that erosion is minimized, and runoff from disturbed areas is treated by a sediment pond or trap. Surface water control essentially consists of three elements:

1. Interception of runoff on and above slopes
2. Conveyance of the runoff to a sediment pond or trap (if the runoff was collected from a disturbed area)
3. Release of the runoff downslope of any disturbed areas.

When to Install: Surface water controls shall be constructed during the initial grading of an area and must be in place before there is any opportunity for storm runoff to cause erosion.

Measures to Install: Interceptor dikes/swales intercept runoff, ditches and pipe slope drains convey the runoff, and riprap or level spreaders help release the runoff in a non-erosive manner. Each measure is to be used under different circumstances so there is very little overlap. However, the two options for releasing water in a non-erosive manner, outlet protection and level spreaders, can be somewhat interchangeable. See Figure D.2.1.6.A for a schematic drawing demonstrating the use of these measures.

DRAFT

FIGURE D.2.1.6.A SKETCH PLAN OF SURFACE WATER CONTROLS

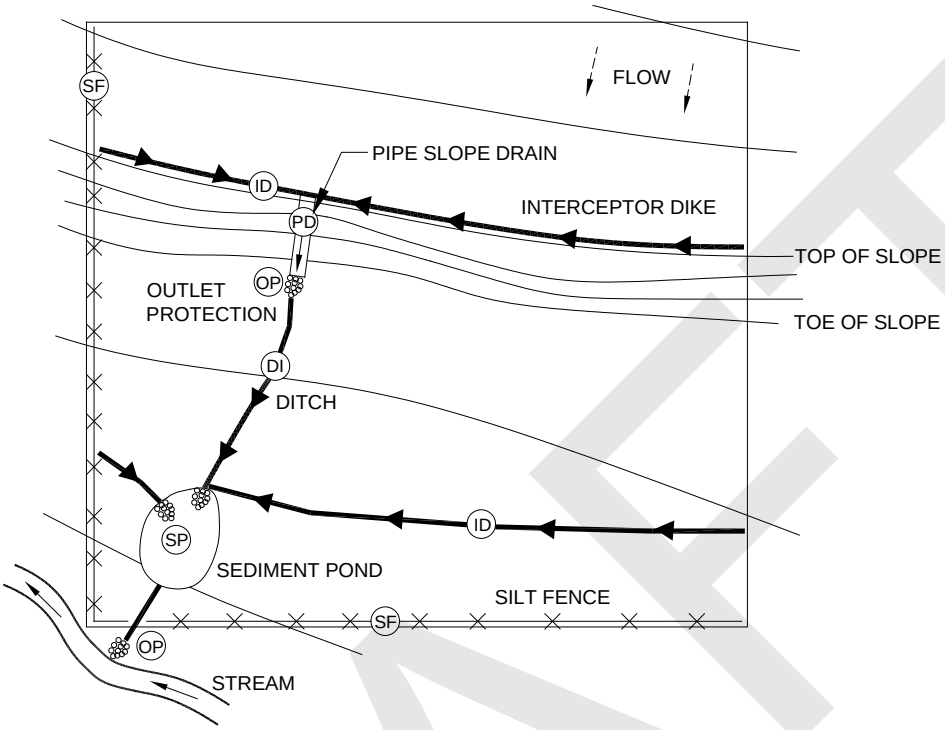

D.2.1.6.1 INTERCEPTOR DIKE AND SWALE

Code: ID or IS Symbol:

or

Purpose

Interceptor dikes and swales intercept storm runoff from drainage areas on or above disturbed slopes and convey it to a sediment pond or trap. They may also be used to intercept runoff from undisturbed areas and convey the runoff to a point below any exposed soils. Interception of surface water reduces the possibility of slope erosion. Interceptor dikes and swales differ from ditches (see Section D.2.1.6.4) in that they are intended to convey smaller flows along low-gradient drainage ways to larger conveyance systems such as ditches or pipe slope drains.

Conditions of Use

Interceptor dikes and swales are required in the following situations:

1. At the top of all slopes in excess of 3H:1V and with more than 20 feet of vertical relief.
2. At intervals on any slope that exceeds the dimensions specified in this section for the horizontal spacing of dikes and swales.

DRAFT

Design and Installation Specifications

1. See Figure D.2.1.6.B for details of an interceptor dike and Figure D.2.1.6.C for an interceptor swale.
2. Interceptor dikes and swales shall be **spaced horizontally** as follows:

Average Slope	Slope Percent	Flowpath Length
20H:1V or less	3–5%	300 feet
(10 to 20)H:1V	5–10%	200 feet
(4 to 10)H:1V	10–25%	100 feet
(2 to 4)H:1V	25–50%	50 feet

3. For slopes steeper than 2H:1V with more than 10 feet of vertical relief, **benches** may be constructed or closer spaced interceptor dikes or swales may be used. Whichever measure is chosen, the spacing and capacity of the measures must be designed by the engineer and the design must include provisions for effectively intercepting the high velocity runoff associated with steep slopes.
4. If the dike or swale intercepts runoff from **disturbed areas**, it shall discharge to a stable conveyance system that routes the runoff to a sediment pond or trap (see Section D.2.1.5). If the dike or swale intercepts runoff that originates from **undisturbed areas**, it shall discharge to a stable conveyance system that routes the runoff downslope of any disturbed areas and releases the water at a stabilized outlet.
5. **Construction traffic** over temporary dikes and swales shall be minimized.

Maintenance Standards

1. Damage resulting from runoff or construction activity shall be repaired immediately.
2. If the facilities do not regularly retain storm runoff, the capacity and/or frequency of the dikes/swales shall be increased.

FIGURE D.2.1.6.B INTERCEPTOR DIKE

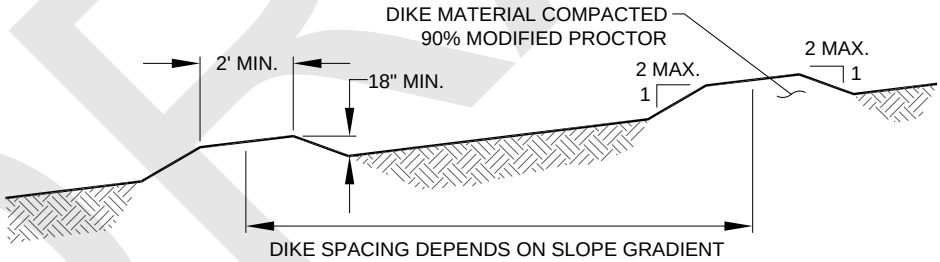

DRAFT

FIGURE D.2.1.6.C INTERCEPTOR SWALE

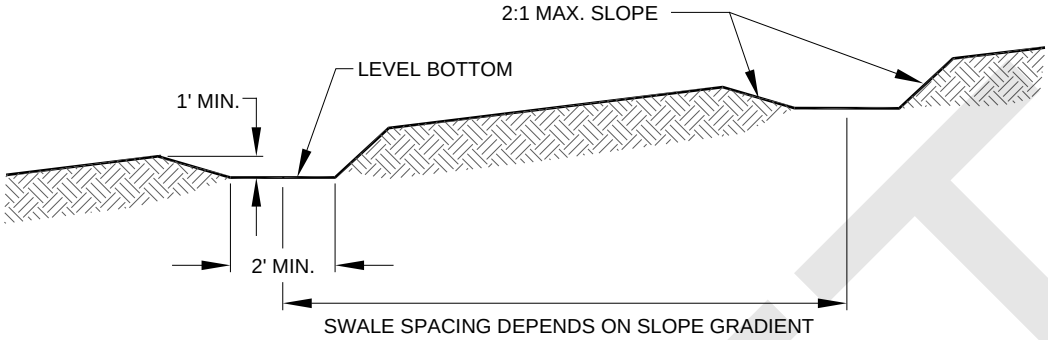

D.2.1.6.2 PIPE SLOPE DRAINS

Code: PD Symbol:

Purpose

Pipe slope drains are designed to carry concentrated runoff down steep slopes without causing erosion, or saturation of slide-prone soils. Pipe slope drains may be used to divert water away from or over bare soil to prevent gullies, channel erosion, and saturation of slide prone soils

Conditions of Use

Pipe slope drains should be used when a temporary or permanent stormwater conveyance is needed to move water down a steep slope to avoid erosion. Pipe slope drains may be:

1. Connected to new catch basins and used temporarily until all permanent piping is installed.
2. Used on any slope with a gradient of 2H:1V or greater and with at least 10 feet of vertical relief.
3. Used to drain water collected from aquifers exposed on cut slopes and convey it to the base of the slope.
4. Used to collect clean runoff from plastic sheet cover and direct away from any exposed soils.
5. Installed in conjunction with silt fence to drain collected water to a controlled area.
6. Used to divert small seasonal streams away from construction. Pipe slope drains have been used successfully on culvert replacement and extension projects. Large flex pipe may be used on larger streams during culvert removal, repair, or replacement.
7. Connected to existing downspouts and roof drains used to divert water away from work areas during building renovation, demolition, and construction projects.
8. Rock-lined ditches or other permanent, non-erosive conveyances used to convey runoff down steep slopes that are not steep slope hazard areas.

Design and Installation Specifications

1. See Figure D.2.1.6.D for details.
2. The **capacity** for temporary drains shall be sufficient to handle the developed 10-year peak flow using the approved model with 15-minute time steps. Up to 30,000 square feet may be drained by each 6-inch minimum diameter pipe without computation of the peak flow. Up to 2 acres may be drained by each 12-inch minimum diameter pipe. Otherwise, the peak flow will need to be computed using the Rational Method described in Section 3.2.1 of the *SWDM*.

DRAFT

3. The **maximum drainage area** allowed for any sized pipe is 10 acres. For larger areas, more than one pipe shall be used or a rock-lined channel shall be installed (see *SWDM* Section 4.4.1, "Open Channels").
4. The **soil** around and under the pipe and entrance section shall be thoroughly compacted.
5. The **flared inlet section** shall be securely connected to the slope drain and be fused or welded, or have flange-bolted mechanical joints to ensure a watertight seal. Ensure that the entrance area is stable and large enough to direct flow into the pipe.
6. Slope drains shall be continuously fused, welded, or flange-bolted mechanical joint pipe systems with proper anchoring to the soil.
7. Where slope drains cross steep **slope hazard areas** or their associated buffers, the installation shall be on the ground surface, accomplished with minimum alteration. In most circumstances, this requires that slope drains be constructed of corrugated metal, CPE, or equivalent pipe and installed by hand (see *SWDM* Section 4.2.1). Any area disturbed during installation or maintenance must be immediately stabilized.
8. If the pipe slope drain will convey **sediment-laden runoff**, the runoff must be directed to a sediment retention facility (see Section D.2.1.5). If the runoff is not from a disturbed area or is conveyed from a sediment trap or pond, it must be conveyed to a stabilized discharge point (see Section D.2.1.6.5).
9. Re-establish cover immediately on areas disturbed by the installation.

Maintenance Standards

1. The inlet shall not be undercut or bypassed by water. If there are problems, the head wall shall be appropriately reinforced.
2. No erosion shall occur at the outlet point. If erosion occurs, additional protection shall be added.

FIGURE D.2.1.6.D PIPE SLOPE DRAIN

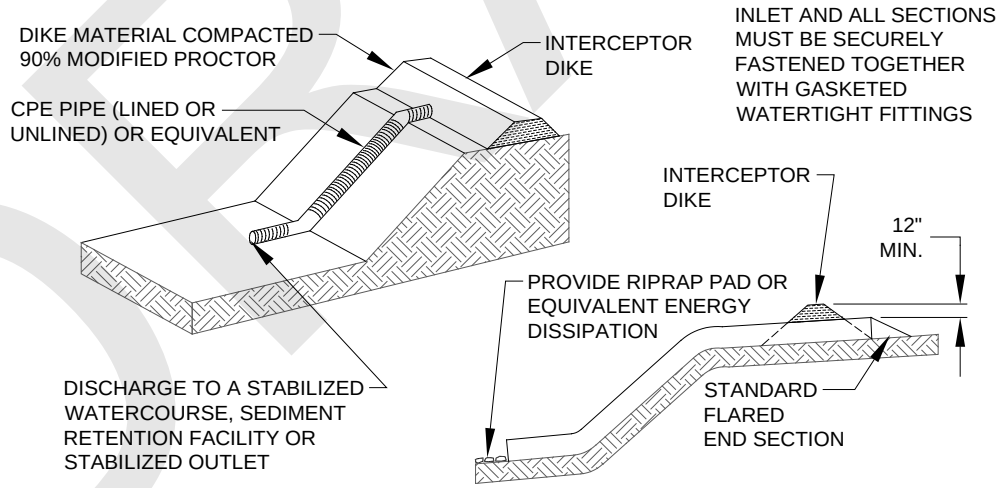

DRAFT

D.2.1.6.3 SUBSURFACE DRAINS

Purpose

To intercept, collect, and convey ground water to a satisfactory outlet, using a perforated pipe or conduit below the ground surface. Subsurface drains are also known as "French Drains." The perforated pipe provides a dewatering mechanism to drain excessively wet soils, provide a stable base for construction, improve stability of structures with shallow foundations, or to reduce hydrostatic pressure and to improve slope stability.

Conditions of Use

Use when excessive water must be removed from the soil. The soil permeability, depth to water table, and impervious layers are all factors that may govern the use of subsurface drains.

Design and Installation Specifications

1. Two types of drains may be used as follows:
   a) **Relief drains** are used either to lower the water table in large, relatively flat areas, improve the growth of vegetation, or to remove surface water. They are installed along a slope and drain in the direction of the slope. They may be installed in a grid pattern, a herringbone pattern, or a random pattern.
   b) **Interceptor drains** are used to remove excess groundwater from a slope, stabilize steep slopes, and lower the water table below a slope to prevent the soil from becoming saturated. They are installed perpendicular to a slope and drain to the side of the slope. They usually consist of a single pipe or single pipes instead of a patterned layout.
2. **Size of Drains** – Size subsurface drains to carry the required capacity without pressurized flow. Minimum diameter for a subsurface drain is 4 inches.
3. **Outlet** – Ensure that the outlet of a drain empties into a channel or other watercourse above the normal water level.

Maintenance Standards

1. Subsurface drains shall be checked periodically to ensure that they are free flowing and not clogged with sediment or roots.
2. The outlet shall be kept clear and free of debris.
3. Surface inlets shall be kept open and free of sediment and other debris.
4. Trees located too close to a subsurface drain often clog the system with roots. If a drain becomes clogged, relocate the drain or remove the trees as a last resort. Drain placement should be planned to minimize this problem.
5. Where drains are crossed by heavy equipment, the line shall be checked to ensure that it is not crushed and have adequate cover protection.

D.2.1.6.4 DITCHES

Code: DI Symbol:

Purpose

Ditches convey intercepted runoff from disturbed areas to and from sediment ponds or traps. They also convey runoff intercepted from undisturbed areas around the site to a non-erosive discharge point.

Conditions of Use

Ditches may be used anywhere that concentrated runoff is to be conveyed on or around the construction site. Temporary pipe systems may also be used to convey runoff.

DRAFT

Design and Installation Specifications

1. Channels and ditches shall be sized to accommodate the developed condition 10-year approved model 15-minute peak flow with 0.5 feet of freeboard. If no hydrologic analysis is required for the site, the Rational Method may be used (see Section 3.2.1 of the *SWDM*).
2. See *SWDM* Section 4.4.1 for open-channel design requirements.
3. The only exception to the requirements of *SWDM* Section 4.4.1 is the use of check dams, rather than grass lining, for channels in which the design flow velocity does not exceed 5 fps. See Figure D.2.1.6.E for details on check dam installation.

Maintenance Standards

1. Any sediment deposition of more than 0.5 feet shall be removed so that the channel is restored to its design capacity.
2. If the channel capacity is insufficient for the design flow, it must be determined whether the problem is local (e.g., a constriction or bend) or the channel is under-designed. If the problem is local, the channel capacity must be increased through construction of a berm(s) or by excavation. If the problem is under-design, the design engineer shall be notified and the channel redesigned to a more conservative standard to be approved by the City of Renton.
3. The channel shall be examined for signs of scouring and erosion of the bed and banks. If scouring or erosion has occurred, affected areas shall be protected by riprap or an erosion control blanket or net.

FIGURE D.2.1.6.E CHECK DAMS

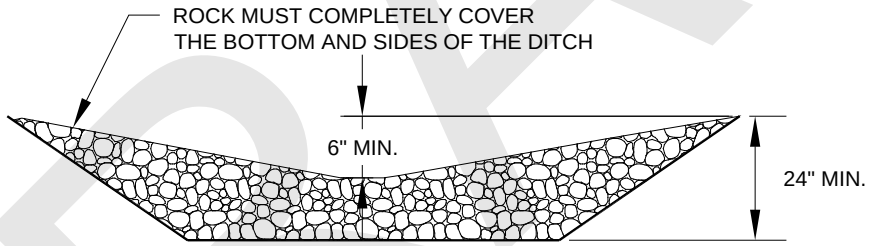

CROSS SECTION

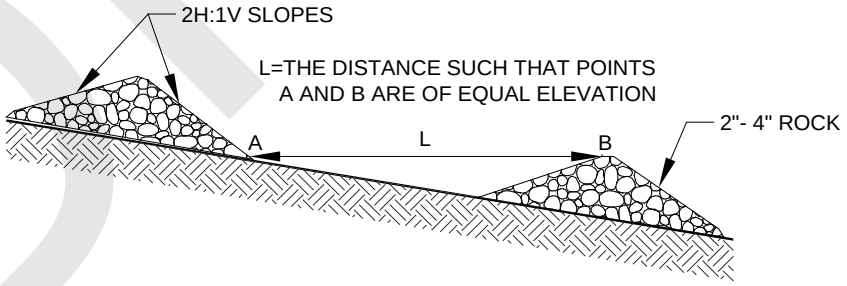

CHECK DAM SPACING

DRAFT

D.2.1.6.5 OUTLET PROTECTION

Code: OP Symbol: 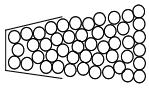

Purpose

Outlet protection prevents scour at conveyance outlets.

Conditions of Use

Outlet protection is required at the outlets of all ponds, pipes, ditches, or other approved conveyances, and where runoff is conveyed to a natural or manmade drainage feature such as a stream, wetland, lake, or ditch.

Design and Installation Specifications

For the standard pipe slope drains in Section D.2.1.6.2 and other smaller conveyance systems, the standard rock pad (6 feet by 8 feet) made of 1-foot thick quarry spall is adequate. For all other outlets, the outlet protection shall meet the requirements of the "Outfalls" section of Core Requirement #4 and Section 4.2.2 of the *SWDM*.

Maintenance Standards for Outlet Protection

If there is scour at the outlet, the eroded area shall be protected with more conservative measures proposed by the design engineer and approved by the City of Renton.

D.2.1.6.6 LEVEL SPREADER

Code: LS Symbol: 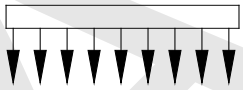

Purpose

Level spreaders convert concentrated runoff to sheet flow and release it onto areas stabilized by existing vegetation.

Conditions of Use

Level spreaders may be used where runoff from undisturbed areas or sediment retention facilities is discharged. This practice applies only where the spreader can be constructed on undisturbed soil and the area below the level lip is vegetated and low gradient (see below).

Note: Level spreaders are conceptually an ideal way to release stormwater since the vegetation and soil allow for the removal of fines from runoff that cannot be removed by settling or filtration. Unfortunately, the performance record of spreaders in the field is dismal. They are frequently under-designed and, despite the best installations, are rarely perfectly level, which results in the release of stormwater at a particular point. This concentrated runoff can result in catastrophic erosion downslope. Given such design failures, ***the use of spreaders is not encouraged****. However, where slopes are gentle and the water volume is relatively low, spreaders may still be the best method. When proposing their use, the designer shall carefully evaluate the site for possible concerns.*

Design and Installation Specifications

1. See Figure D.2.1.6.F for detail. Other designs may be used subject to City approval.
2. If runoff velocity as it enters the level spreader is more than 4 fps for the developed condition 10-year approved model 15-minute peak flow, a **riprap apron** must be provided to dissipate energy before the runoff enters the spreader (Section D.2.1.6.5).
3. The **total spreader length** shall be at least the square root of the catchment area. The maximum length for an individual spreader is 50 feet, limiting the catchment area that a single spreader may serve to 2500 square feet. Although this is very small, four 50-foot level spreaders next to one another

DRAFT

could serve nearly an acre (40,000 square feet). Multiple spreaders shall not be placed uphill or downhill from one another in a configuration that would allow water released from one spreader to enter a downslope spreader.

4. The area below the spreader for a horizontal distance of 100 feet shall not exceed 20 percent and shall be completely vegetated with no areas of instability or erosion. The topography for a horizontal distance of 50 feet below the spreader shall be uniform so that runoff is not funneled into a swale or channel immediately after its release.
5. The level spreader shall be **seeded and mulched** in accordance with Section D.2.1.2.

Maintenance Standards

1. Any damage to the spreader shall be immediately repaired. Ensure flows do not bypass the spreader at the ends of the spreader.
2. The downslope area shall be checked for signs of erosion and to verify that the spreader is not functioning as a point discharge. Any eroded areas shall be immediately stabilized, and the cause determined and eliminated if possible. If the erosion is recurrent and the design, even when properly installed and maintained, is not adequate to prevent erosion, a new method of releasing runoff shall be installed in accordance with the standards of this appendix. Any new design must be approved by the City of Renton.

FIGURE D.2.1.6.F LEVEL SPREADER

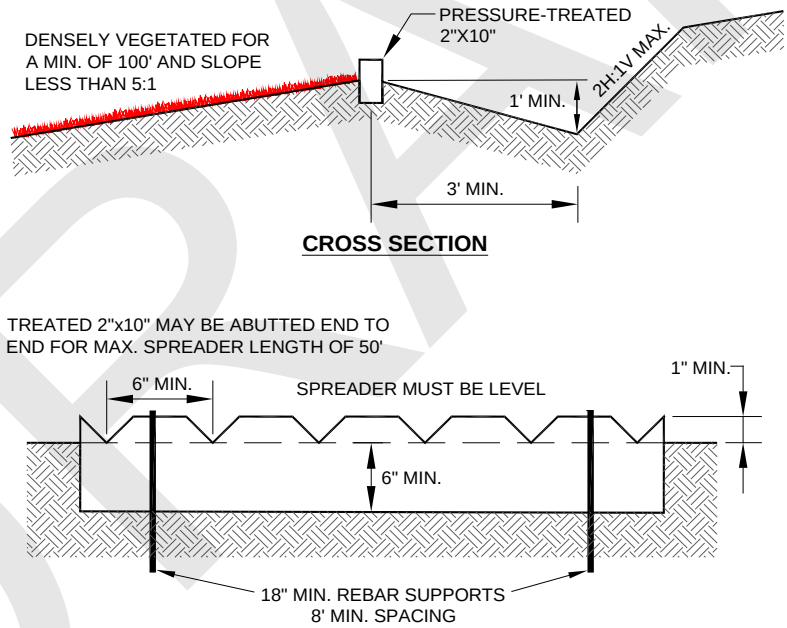

DRAFT

D.2.1.7 DEWATERING CONTROL

Any runoff generated by dewatering shall be treated through construction of a sediment trap (Section D.2.1.5.1) when there is sufficient space or by releasing the water to a well vegetated, gently sloping area. Since pumps are used for dewatering, it may be possible to pump the sediment-laden water well away from the surface water so that vegetation can be more effectively utilized for treatment. Discharge of sediment-laden water from dewatering activities to surface and storm waters is prohibited. If dewatering occurs from areas where the water has come in contact with new concrete, such as tanks, vaults, or foundations, the pH of the water must be monitored and must be neutralized prior to discharge. Clean non-turbid dewatering water, such as well point ground water can be discharged to systems tributary to, or directly to surface waters provided the flows are controlled so no erosion or flooding occurs. Clean water must not be routed through a stormwater sediment pond. Highly turbid or contaminated dewatering water must be handled separately from stormwater.

Purpose: To prevent the untreated discharge of sediment-laden water from dewatering of utilities, excavated areas, foundations, etc.

When to Install: Dewatering control measures shall be used whenever there is a potential for runoff from dewatering of utilities, excavations, foundations, etc.

Measures to install:

1. Foundation, vault, excavation, and trench dewatering water that has similar characteristics to stormwater runoff at the site shall be discharged into a controlled conveyance system prior to discharge to a sediment trap or sediment pond. Foundation and trench dewatering water **that has similar characteristics to stormwater runoff** at the site must be disposed of through one of the following options depending on site constraints:
   a) Infiltration,
   b) Transport offsite in a vehicle, such as a vacuum flush truck, for legal disposal in a manner that does not pollute surface waters,
   c) Discharge to the sanitary sewer discharge with approval from King County and the City of Renton if there is no other option, or
   d) Use of a sedimentation bag with outfall to a ditch or swale for small volumes of localized dewatering.
2. Clean, non-turbid dewatering water, such as well-point ground water, may be discharged via stable conveyance to systems tributary to surface waters, provided the dewatering flow does not cause erosion or flooding of receiving waters.
3. **Highly turbid or contaminated dewatering water (high pH or other) shall be handled separately** from stormwater. See Section D.2.2 , *SWPPS Measures*.

D.2.1.8 DUST CONTROL

Preventative measures to minimize the wind transport of soil shall be taken when a traffic hazard may be created or when sediment transported by wind is likely to be deposited in water resources or adjacent properties.

Purpose: To prevent wind transport of dust from exposed soil surfaces onto roadways, drainage ways, and surface waters.

When to Install: Dust control shall be implemented when exposed soils are dry to the point that wind transport is possible and roadways, drainage ways, or surface waters are likely to be impacted. Dust control measures may consist of chemical, structural, or mechanical methods.

DRAFT

Measures to Install: Water is the most common dust control (or palliative) used in the area. When using water for dust control, the exposed soils shall be sprayed until wet, but runoff shall not be generated by spraying. Calcium chloride, Magnesium chloride, Lignin derivatives, Tree Resin Emulsions, and Synthetic Polymer Emulsions may also be used for dust control. Exposed areas shall be re-sprayed as needed. Oil shall not be used for dust control. The following table lists many common dust control measures. Some of the measures are not recommended for use in the City and must have prior approval prior to use from the CED inspector assigned to specific projects.

DRAFT

TABLE D.2.1.8.A DUST CONTROL MEASURES

METHOD	CONSIDERATIONS	SITE PREPARATION	RECOMMENDED APPLICATION RATE
Water	-Most commonly used practice -Evaporates quickly -Lasts less than 1 day	For all liquid agents: -Blade a small surface -Crown or slope surface to avoid ponding -Compact soils if needed -Uniformly pre-wet at 0.03 – 0.3 gal/sq yd -Apply solution under pressure. Overlap solution 6 – 12 inches -Allow treated area to cure 0 – 4 hours -Compact area after curing -Apply second treatment before first treatment becomes ineffective	0.125 gal/sq yd every 20 to 30 minutes
Salts Calcium Chloride (CaCl)	-Restricts evaporation -Lasts 6–12 months -Can be corrosive -Less effective in low humidity -Can build up in soils and leach by rain		Apply 38% solution at 1.21L/m2 (0.27 gal/yd2) or as loose dry granules per manufacturer
Magnesium Chloride (MgCl)	-Restricts evaporation -Works at higher temperatures and lower humidity than CaCl -May be more costly than CaCl		Apply 26 – 32% solution at 2.3 L/m2 (0.5 gal/yd2)
Sodium Chloride (NaCl)	-Effective over smaller range of conditions -Less expensive -Can be corrosive -Less effective in low humidity		Per Manufacturer
Silicates	-Generally expensive -Available in small quantities -Require Second application		
Surfactants	-High evaporation rates -Effective for short time periods -Must apply frequently		
Copolymers	-Forms semi-permeable transparent crust -Resists ultraviolet radiation and moisture induced breakdown -Last 1 to 2 years		750 – 940 L/ha (80 – 100 gal/ac)
Petroleum Products	-Used oil is prohibited as a dust control method -Bind soil particles -May hinder foliage growth -Environmental and aesthetic concerns -Higher cost		Use 57 – 63% resins as base. Apply at 750 – 940 L/ha (80–100 gal/ac)
Lignin Sulfonate	-Paper industry waste product -Acts as dispersing agent -Best in dry climates -Can be slippery -Will decrease Dissolved Oxygen in waterways therefore cannot be used adjacent to surface water systems		Loosen surface 25–50 mm (1–2 inches) Need 4–8% fines
Vegetable Oils	-Coat grains of soils, so limited binding ability -May become brittle -Limited availability		Per Manufacturer
Spray on Adhesives	-Available as organic or synthetic -Effective on dry, hard soils -Forms a crust -Can last 3 to 4 years		Per Manufacturer

DRAFT

D.2.1.9 FLOW CONTROL

Surface water from disturbed areas must be routed through the project's onsite flow control facility or other provisions must made to prevent increases in the existing site conditions 2-year and 10-year runoff peaks discharging from the project site during construction.

Purpose: The purpose of surface water flow control is to mitigate increases in runoff peaks that occur during construction as a result of clearing vegetation, compacting the soil, and adding impervious surface. Such increases can cause or aggravate downstream flooding and erosion.

When to Install: Surface water flow control shall be installed or otherwise provided prior to any clearing and/or grading of the site, except that required to construct the surface water flow control facilities.

Measures to Use: The project's onsite flow control facility or other equivalent storage facility that meets the peak-matching performance criteria stated above.

D.2.1.10 PROTECT EXISTING AND PROPOSED STORMWATER FACILITIES AND ON-SITE BMPS

Protection measures shall be applied/installed and maintained so as to prevent adverse impacts to existing stormwater facilities and on-site BMPs and areas of proposed stormwater facilities and on-site BMPs for the project. Adverse impacts can prompt the requirement to restore or replace affected stormwater facilities and on-site BMPs.

Purpose: The purpose of protecting existing and proposed stormwater facility and on-site BMP areas is to avoid sedimentation and soil compaction that would adversely affect infiltration, and also avoid contamination by other pollutants.

When to Install: Stormwater facility and on-site BMP area protection shall be installed or otherwise provided prior to any clearing and/or grading of the site, except that required to construct stormwater facilities and on-site BMPs.

Measures to Use:

1. Protect all stormwater facilities and on-site BMPs and proposed stormwater facility and on-site BMP footprints from sedimentation through installation and maintenance of erosion and sediment control BMPs on portions of the site that drain into the BMPs/facilities.
2. Stormwater facilities and on-site BMPs shall be restored to their fully functioning condition if they accumulate sediment during construction. Restoring the stormwater facilities and on-site BMPs shall include, at a minimum, removal of sediment and any sediment-laden bioretention soils, and replacing the removed soils with soils meeting the design specification. Replacement with a new fully-functioning stormwater facility and/or on-site BMP may be required if restoration to the fully-functioning condition can't be accomplished.
3. Prevent compacting Bioretention BMPs/facilities by excluding construction equipment and foot traffic. Protect completed lawn and landscaped areas from compaction due to construction equipment.
4. Control erosion and avoid introducing sediment from surrounding land uses onto permeable pavement BMPs. Do not allow muddy construction equipment on the base material or pavement. Do not allow sediment-laden runoff onto permeable pavements.
5. Permeable pavement BMPs fouled with sediments or no longer passing an initial infiltration text must be cleaned using procedures from Appendix A or the manufacturer's procedures.
6. Keep all heavy equipment off existing soils under stormwater facilities and on-site BMPs that have been excavated to final grade to retain the infiltration rate of the soils.

DRAFT

D.2.1.11 MAINTAIN PROTECTIVE BMPS

Protection measures shall be maintained to ensure continued performance of their intended function, to prevent adverse impacts to existing stormwater facilities and on-site BMPs and areas of proposed BMPs/facilities, and protect other disturbed areas of the project.

Purpose: The purpose of maintaining protective BMPs is to provide continuous erosion and sediment control protection throughout the life of the project, and avoid sedimentation, soil compaction and contamination by other pollutants that would adversely affect infiltration and surface runoff.

When to Maintain: Protection measures shall be monitored per Section D.2.4.4 at a minimum, and promptly maintained to fully functioning condition as necessary to ensure continued performance of their intended function.

Measures to Use:

1. Maintain and repair all temporary and permanent erosion and sediment control BMPs as needed to ensure continued performance of their intended function in accordance with BMP specifications.
2. Remove all temporary erosion and sediment control BMPs prior to final construction approval, or within 30 days after achieving *final* site stabilization or after the temporary BMPs are no longer needed.
3. Provide protection to all stormwater facilities and on-site BMPs installed for the permanent control of stormwater from sediment and compaction. All stormwater facilities and on-site BMPs that are to remain in place following completion of construction shall be examined and placed in full operating conditions. If sediment enters the stormwater facilities and/or on-site BMPs during construction, it shall be removed and the stormwater facility and on-site BMP shall be returned to the conditions specified in the construction documents or as required for full stormwater facility and on-site BMP replacement.
4. Remove or stabilize trapped sediment on site. Permanently stabilize disturbed soil resulting from removal of erosion and sediment control BMPs or vegetation.

D.2.1.12 MANAGE THE PROJECT

Coordination and timing of site development activities relative to ESC concerns (Section D.2.4), and timely inspection, maintenance and update of protective measures (Section D.2.3) are necessary to effectively manage the project and ensure the success of protective ESC and SWPPS design and implementation.

Projects shall assign a qualified CSWPP Supervisor (Section D.2.3.1) to be the primary contact for ESC and SWPPP issues and reporting, coordination with subcontractors and implementation of the CSWPP plan as a whole.

Measures to Use:

1. Phase development projects to the maximum degree practicable and take into account seasonal work limits.
2. Inspection and monitoring – Inspect, maintain, and repair all BMPs as needed to ensure continued performance of their intended function. Conduct site inspections and monitoring in accordance with the Construction Stormwater General Permit and City requirements.
3. Maintaining an updated construction SWPPP – Maintain, update, and implement the SWPPP in accordance with the Construction Stormwater General Permit and City requirements.
4. Projects that disturb one or more acres must have, site inspections conducted by a Certified Erosion and Sediment Control Lead (CESCL) (see Section D.2.3.1). Project sites less than one acre (not part of a larger common plan of development or sale) may have a person without CESCL certification

DRAFT

conduct inspections. By the initiation of construction, the SWPPP must identify the CESCL or inspector, who shall be present onsite or on-call at all times.

The CESCL or inspector (project sites less than one acre) must have the skills to assess the:

- Site conditions and construction activities that could impact the quality of stormwater.
- Effectiveness of erosion and sediment control measures used to control the quality of stormwater discharges.
- The CESCL or inspector must examine stormwater visually for the presence of suspended sediment, turbidity, discoloration, and oil sheen. They must evaluate the effectiveness of BMPs and determine if it is necessary to install, maintain, or repair BMPs to improve the quality of stormwater discharges.

Based on the results of the inspection, construction site operators must correct the problems identified by:

- Reviewing the SWPPP for compliance with all construction SWPPP elements and making appropriate revisions within 7 days of the inspection.
- Immediately beginning the process of fully implementing and maintaining appropriate source control and/or treatment BMPs as soon as possible, addressing the problems not later than within 10 days of the inspection. If installation of necessary treatment BMPs is not feasible within 10 days, the construction site operator may request an extension within the initial 10-day response period.
- Documenting BMP implementation and maintenance in the site log book (applies only to sites that have coverage under the Construction Stormwater General Permit).
- The CESCL or inspector must inspect all areas disturbed by construction activities, all BMPs, and all stormwater discharge points at least once every calendar week and within 24 hours of any discharge from the site. (For purposes of this condition, individual discharge events that last more than one day do not require daily inspections. For example, if a stormwater pond discharges continuously over the course of a week, only one inspection is required that week.) The CESCL or inspector may reduce the inspection frequency for temporary stabilized, inactive sites to once every calendar month.

D.2.2 SWPPS MEASURES

This section details the SWPPS measures that are required to prevent, reduce, or eliminate the discharge of pollutants to onsite or adjacent stormwater systems or watercourses from construction-related activities such as materials delivery and storage, onsite equipment fueling and maintenance, demolition of existing buildings and disposition of demolition materials and other waste, and concrete handling, washout and disposal. These SWPPS measures represent *Best Management Practices (BMPs)*[8] for the control of pollutant drips and spills as well as other impacts related to construction such as increased pH in concrete construction and handling activities. Compliance with each of the SWPPS measures, and with any project-specific control measures, to the extent applicable and necessary to meet the performance criteria in Section D.2.2, and compliance with the CSWPP implementation requirements in Section D.2.4, constitutes overall compliance with the City's CSWPP Standards.

Note: Additional measures shall be required by the City if the existing standards are insufficient to protect adjacent properties, drainage facilities, or water resources.

The standards for each individual SWPPS measure are divided into four sections:

1. Purpose
2. Conditions of Use

[8] *Best Management Practices (BMPs)* means the best available and reasonable physical, structural, managerial, or behavioral activities, that when singly or in combination, eliminate or reduce the contamination of surface and/or ground waters.

3. Design and Installation Specifications
4. Maintenance Requirements.

Note that the "Conditions of Use" always refers to site conditions. As site conditions change, SWPPS measures must be changed to remain in compliance with the requirements of this appendix.

Whenever compliance with City SWPPS Standards is required, all of the following SWPPS measures must be considered for application to the project site as detailed in the following sections. The construction pollutant generating concerns addressed by the BMPs that follow include:

- Concrete handling, washout and disposal(specifically portland cement concrete)
- Sawcutting and surfacing activities
- Materials delivery, storage and containment
- Filtration and chemical treatment of construction water to facilitate disposal or discharge to approved locations
- Reporting requirements and documentation availability for specific BMP processes

Additionally, several of the ESC BMPs described in Section D.2.1 can be applicable to the SWPPS plan, e.g., use of cover, fencing and access protection to protect temporary materials storage locations. The applicant's material supplier may be a resource (subject to City approval) for BMPs to address specific project applications or proposals. Conditions of approval on adjustments may also specify additional requirements for the SWPPS plan.

D.2.2.1 CONCRETE HANDLING

Purpose

Concrete work can generate process water and slurry that contain fine particles and high pH, both of which can violate water quality standards in the receiving water. Concrete spillage or concrete discharge to surface waters of the State is prohibited. Use this BMP to minimize and eliminate concrete, concrete process water, and concrete slurry from entering waters of the state.

Conditions of Use

Any time concrete is used, utilize these management practices. Concrete construction projects include, but are not limited to, curbs, sidewalks, roads, bridges, foundations, floors, stormwater vaults, retaining walls, driveways and runways.

Design and Installation Specifications

1. Ensure that washout of concrete trucks, chutes, pumps, and internals is performed at an approved off-site location or in designated concrete washout areas. Do not wash out concrete trucks onto the ground, or into storm drains, open ditches, streets, or streams. Refer to BMP D.2.2.2 for information on concrete washout areas.
2. Return unused concrete remaining in the truck and pump to the originating batch plant for recycling. Do not dump excess concrete on site, except in designated concrete washout areas.
3. Wash off hand tools including, but not limited to, screeds, shovels, rakes, floats, and trowels into formed areas only.
4. Wash equipment difficult to move, such as concrete pavers in areas that do not directly drain to natural or constructed stormwater conveyances.
5. Do not allow washdown from areas, such as concrete aggregate driveways, to drain directly to natural or constructed stormwater conveyances.
6. Contain washwater and leftover product in a lined container when no formed areas are available,. Dispose of contained concrete in a manner that does not violate ground water or surface water quality standards.

DRAFT

7. Always use forms or solid barriers for concrete pours, such as pilings, within 15-feet of surface waters.
8. Refer to BMPs D.2.2.7 and D.2.2.8 for pH adjustment requirements.
9. Refer to the Construction Stormwater General Permit for pH monitoring requirements if the project involves one of the following activities:
   - Significant concrete work (greater than 1,000 cubic yards poured concrete or recycled concrete used over the life of a project).
   - The use of engineered soils amended with (but not limited to) Portland cement-treated base, cement kiln dust or fly ash.
   - Discharging stormwater to segments of water bodies on the 303(d) list (Category 5) for high pH.

Maintenance Standards

Check containers for holes in the liner daily during concrete pours and repair the same day.

D.2.2.2 CONCRETE WASHOUT AREA

Purpose

Prevent or reduce the discharge of pollutants to stormwater from concrete waste by conducting washout off-site, or performing onsite washout in a designated area to prevent pollutants from entering surface waters or ground water.

Conditions of Use

Concrete washout area best management practices are implemented on construction projects where:

- Concrete is used as a construction material
- It is not possible to dispose of all concrete wastewater and washout off-site (ready mix plant, etc.).
- Concrete trucks, pumpers, or other concrete coated equipment are washed onsite.

Note: If less than 10 concrete trucks or pumpers need to be washed out onsite, the washwater may be disposed of in a formed area awaiting concrete or an upland disposal site where it will not contaminate surface or ground water. The upland disposal site shall be at least 50 feet from sensitive areas such as storm drains, open ditches, or water bodies, including wetlands.

Design and Installation Specifications

Implementation

The following steps will help reduce stormwater pollution from concrete wastes:

1. Perform washout of concrete trucks at an approved off-site location or in designated concrete washout areas only.
2. Do not wash out concrete trucks onto the ground, or into storm drains, open ditches, streets, or streams.
3. Do not allow excess concrete to be dumped onsite, except in designated concrete washout areas.
4. Concrete washout areas may be prefabricated concrete washout containers, or self-installed structures (above-grade or below-grade).
5. Prefabricated containers are most resistant to damage and protect against spills and leaks. Companies may offer delivery service and provide regular maintenance and disposal of solid and liquid waste.
6. If self-installed concrete washout areas are used, below-grade structures are preferred over above-grade structures because they are less prone to spills and leaks.
7. Self-installed above-grade structures should only be used if excavation is not practical.

DRAFT

Education

1. Discuss the concrete management techniques described in this BMP with the ready-mix concrete supplier before any deliveries are made.
2. Educate employees and subcontractors on the concrete waste management techniques described in this BMP.
3. Arrange for contractor's superintendent or Certified Erosion and Sediment Control Lead (CESCL) to oversee and enforce concrete waste management procedures.
4. A sign should be installed adjacent to each temporary concrete washout facility to inform concrete equipment operators to utilize the proper facilities.

Contracts

Incorporate requirements for concrete waste management into concrete supplier and subcontractor agreements.

Location and Placement

1. Locate washout area at least 50 feet from sensitive areas such as storm drains, open ditches, or water bodies, including wetlands.
2. Allow convenient access for concrete trucks, preferably near the area where the concrete is being poured.
3. If trucks need to leave a paved area to access washout, prevent track-out with a pad of rock or quarry spalls (see BMP D.2.1.4.2). These areas should be far enough away from other construction traffic to reduce the likelihood of accidental damage and spills.
4. The number of facilities you install should depend on the expected demand for storage capacity.
5. On large sites with extensive concrete work, washouts should be placed in multiple locations for ease of use by concrete truck drivers.

On-Site Temporary Concrete Washout Facility, Transit Truck Washout Procedures:

1. Temporary concrete washout facilities shall be located a minimum of 50 feet from sensitive areas including storm drain inlets, open drainage facilities, and watercourses. (See Figures D.2.2.2.A, D.2.2.2.B and D.2.2.2.C).
2. Concrete washout facilities shall be constructed and maintained in sufficient quantity and size to contain all liquid and concrete waste generated by washout operations.
3. Washout of concrete trucks shall be performed in designated areas only.
4. Concrete washout from concrete pumper bins can be washed into concrete pumper trucks and discharged into designated washout area or properly disposed of off-site.
5. Once concrete wastes are washed into the designated area and allowed to harden, the concrete should be broken up, removed, and disposed of per applicable solid waste regulations. Dispose of hardened concrete on a regular basis.
6. Temporary Above-Grade Concrete Washout Facility
   a) Temporary concrete washout facility (type above grade) should be constructed as shown on the details below, with a recommended minimum length and minimum width of 10 ft, but with sufficient quantity and volume to contain all liquid and concrete waste generated by washout operations.
   b) Plastic lining material should be a minimum of 10 mil polyethylene sheeting and should be free of holes, tears, or other defects that compromise the impermeability of the material.

DRAFT

7. Temporary Below-Grade Concrete Washout Facility
   a) Temporary concrete washout facilities (type below grade) should be constructed as shown on the details below, with a recommended minimum length and minimum width of 10 ft. The quantity and volume should be sufficient to contain all liquid and concrete waste generated by washout operations.
   b) Lath and flagging should be commercial type.
   c) Plastic lining material shall be a minimum of 10 mil polyethylene sheeting and should be free of holes, tears, or other defects that compromise the impermeability of the material.
   d) Liner seams shall be installed in accordance with manufacturers' recommendations.
   e) Soil base shall be prepared free of rocks or other debris that may cause tears or holes in the plastic lining material.

Maintenance Standards

Inspection and Maintenance

1. Inspect and verify that concrete washout BMPs are in place prior to the commencement of concrete work.
2. During periods of concrete work, inspect daily to verify continued performance.
   a) Check overall condition and performance.
   b) Check remaining capacity (% full).
   c) If using self-installed washout facilities, verify plastic liners are intact and sidewalls are not damaged.
   d) If using prefabricated containers, check for leaks.
3. Washout facilities shall be maintained to provide adequate holding capacity with a minimum freeboard of 12 inches.
4. Washout facilities must be cleaned, or new facilities must be constructed and ready for use once the washout is 75% full.
5. If the washout is nearing capacity, vacuum and dispose of the waste material in an approved manner.
   a) Do not discharge liquid or slurry to waterways, storm drains or directly onto ground.
   b) Do not use sanitary sewer without local approval.
   c) Place a secure, non-collapsing, non-water collecting cover over the concrete washout facility prior to predicted wet weather to prevent accumulation and overflow of precipitation.
   d) Remove and dispose of hardened concrete and return the structure to a functional condition. Concrete may be reused onsite or hauled away for disposal or recycling.
6. When you remove materials from the self-installed concrete washout, build a new structure; or, if the previous structure is still intact, inspect for signs of weakening or damage, and make any necessary repairs. Re-line the structure with new plastic after each cleaning.

Removal of Temporary Concrete Washout Facilities

1. When temporary concrete washout facilities are no longer required for the work, the hardened concrete, slurries and liquids shall be removed and properly disposed of.
2. Materials used to construct temporary concrete washout facilities shall be removed from the site of the work and disposed of or recycled.
3. Holes, depressions or other ground disturbance caused by the removal of the temporary concrete washout facilities shall be backfilled, repaired, and stabilized to prevent erosion.

DRAFT

FIGURE D.2.2.2.A CONCRETE WASHOUT AREA (ABOVE GRADE)

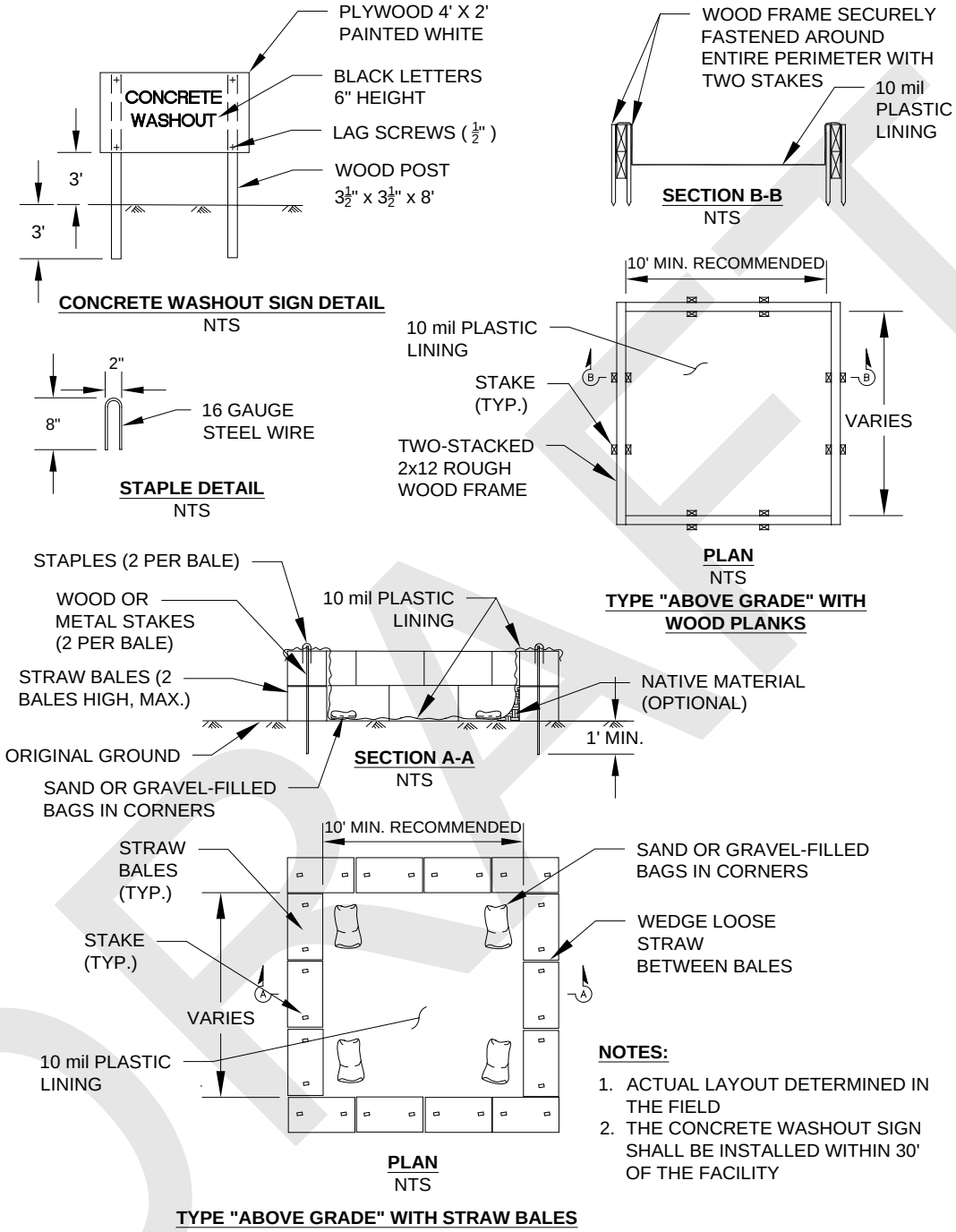

NOTES:

1. ACTUAL LAYOUT DETERMINED IN THE FIELD
2. THE CONCRETE WASHOUT SIGN SHALL BE INSTALLED WITHIN 30' OF THE FACILITY

ABOVE GRADE TEMPORARY CONCRETE WASHOUT FACILITY

NTS

Adapted from CalTrans Fig4-14 SAC 8-14-02

DRAFT

FIGURE D.2.2.2.B CONCRETE WASHOUT AREA (BELOW GRADE)

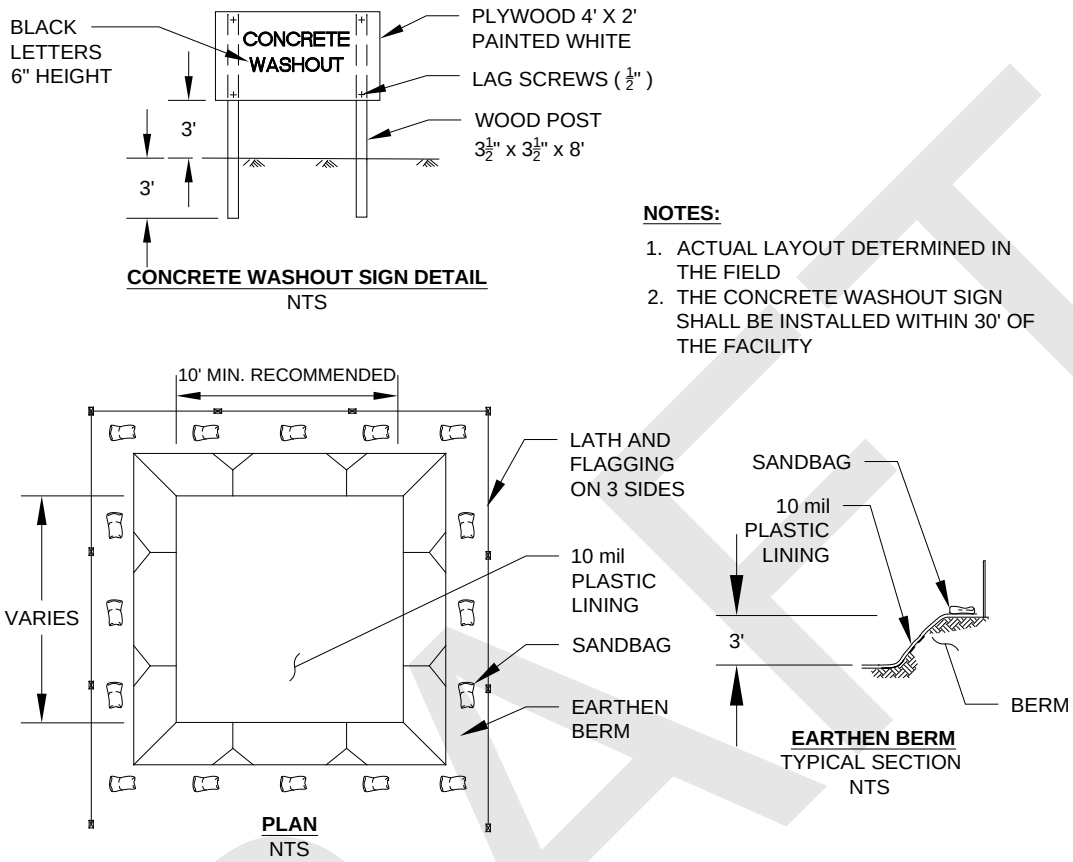

BELOW GRADE TEMPORARY CONCRETE WASHOUT FACILITY
NTS

Adapted from CalTrans Fig4-14 SAC 8-14-02

FIGURE D.2.2.2.C PREFABRICATED CONCRETE WASHOUT CONTAINER W/RAMP

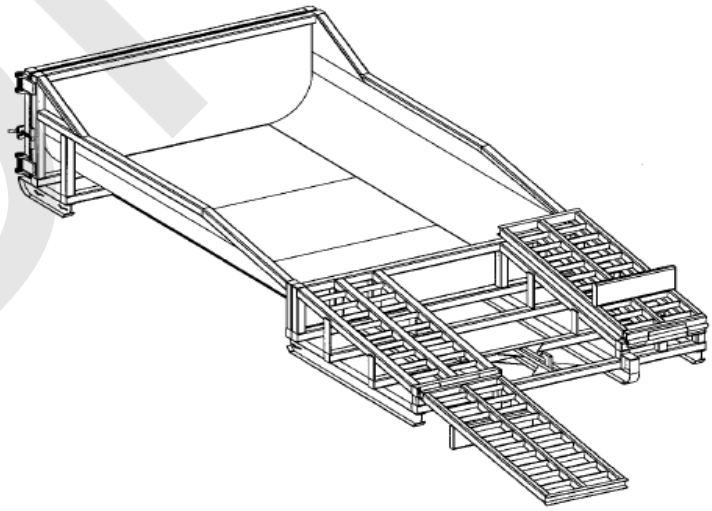

DRAFT

D.2.2.3 SAWCUTTING AND SURFACING POLLUTION PREVENTION

Purpose

Sawcutting and surfacing operations generate slurry and process water that contains fine particles and high pH (concrete cutting), both of which can violate the water quality standards in the receiving water. Concrete spillage or concrete discharge to surface waters of the State is prohibited. Use this BMP to minimize and eliminate process water and slurry created through sawcutting or surfacing from entering waters of the State.

Conditions of Use

Utilize these management practices anytime sawcutting or surfacing operations take place. Sawcutting and surfacing operations include, but are not limited to, sawing, coring, grinding, roughening, hydro-demolition, bridge and road surfacing

Design and Installation Specifications

1. Vacuum slurry and cuttings during cutting and surfacing operations.
2. Slurry and cuttings shall not remain on permanent concrete or asphalt pavement overnight.
3. Slurry and cuttings shall not drain to any natural or constructed drainage conveyance including stormwater systems. This may require temporarily blocking catch basins.
4. Dispose of collected slurry and cuttings in a manner that does not violate ground water or surface water quality standards.
5. Do not allow process water generated during hydro-demolition, surface roughening or similar operations to drain to any natural or constructed drainage conveyance including stormwater systems. Dispose process water in a manner that does not violate ground water or surface water quality standards.
6. Handle and dispose cleaning waste material and demolition debris in a manner that does not cause contamination of water. Dispose of sweeping material from a pick-up sweeper at an appropriate disposal site.

Maintenance Standards

Continually monitor operations to determine whether slurry, cuttings, or process water could enter waters of the state. If inspections show that a violation of water quality standards could occur, stop operations and immediately implement preventive measures such as berms, barriers, secondary containment, and vacuum trucks.

D.2.2.4 MATERIAL DELIVERY, STORAGE, AND CONTAINMENT

Purpose

Prevent, reduce, or eliminate the discharge of pollutants to the stormwater system or watercourses from material delivery and storage. Minimize the storage of hazardous materials onsite, store materials in a designated area, and install secondary containment.

Conditions of Use

These procedures are suitable for use at all construction sites with delivery and storage of the following materials:

- Petroleum products such as fuel, oil and grease
- Soil stabilizers and binders (e.g., Polyacrylamide)
- Fertilizers, pesticides and herbicides
- Detergents
- Asphalt and concrete compounds

DRAFT

- Hazardous chemicals such as acids, lime, adhesives, paints, solvents and curing compounds
- Any other material that may be detrimental if released to the environment

Design and Installation Specifications

The following steps should be taken to minimize risk:

1. Temporary storage area should be located away from vehicular traffic, near the construction entrance(s), and away from waterways or storm drains.
2. Material Safety Data Sheets (MSDS) should be supplied for all materials stored. Chemicals should be kept in their original labeled containers.
3. Hazardous material storage onsite should be minimized.
4. Hazardous materials should be handled as infrequently as possible.
5. During the wet weather season (October 1 – April 30), consider storing materials in a covered area.
6. Materials should be stored in secondary containments, such as earthen dike, horse trough, or even a children's wading pool for non-reactive materials such as detergents, oil, grease, and paints. Small amounts of material may be secondarily contained in "bus boy" trays or concrete mixing trays.
7. Do not store chemicals, drums, or bagged materials directly on the ground. Place these items on a pallet and, when possible, and within secondary containment.
8. If drums must be kept uncovered, store them at a slight angle to reduce ponding of rainwater on the lids to reduce corrosion. Domed plastic covers are inexpensive and snap to the top of drums, preventing water from collecting.

Material Storage Areas and Secondary Containment Practices:

1. Liquids, petroleum products, and substances listed in 40 CFR Parts 110, 117, or 302 shall be stored in approved containers and drums and shall not be overfilled. Containers and drums shall be stored in temporary secondary containment facilities.
2. Temporary secondary containment facilities shall provide for a spill containment volume able to contain 10% of the total enclosed container volume of all containers, or 110% of the capacity of the largest container within its boundary, whichever is greater.
3. Secondary containment facilities shall be impervious to the materials stored therein for a minimum contact time of 72 hours.
4. Secondary containment facilities shall be maintained free of accumulated rainwater and spills. In the event of spills or leaks, accumulated rainwater and spills shall be collected and placed into drums. These liquids shall be handled as hazardous waste unless testing determines them to be non-hazardous.
5. Sufficient separation should be provided between stored containers to allow for spill cleanup and emergency response access.
6. During the wet weather season (October 1 – April 30), each secondary containment facility shall be covered during non-working days, prior to and during rain events.
7. Keep material storage areas clean, organized and equipped with an ample supply of appropriate spill clean-up material (spill kit).
8. The spill kit should include, at a minimum:
    - 1-Water Resistant Nylon Bag
    - 3-Oil Absorbent Socks 3″ x 4′
    - 2-Oil Absorbent Socks 3″ x 10′
    - 12-Oil Absorbent Pads 17″ x 19″

DRAFT

- 1-Pair Splash Resistant Goggles
- 3-Pair Nitrile Gloves
- 10-Disposable Bags with Ties
- Instructions

D.2.2.5 CONSTRUCTION STORMWATER CHEMICAL TREATMENT

Purpose

This BMP applies when using stormwater chemicals in batch treatment or flow-through treatment.

Turbidity is difficult to control once fine particles are suspended in stormwater runoff from a construction site. Sedimentation ponds are effective at removing larger particulate matter by gravity settling, but are ineffective at removing smaller particulates such as clay and fine silt. Traditional erosion and sediment control BMPs may not be adequate to ensure compliance with the water quality standards for turbidity in receiving water.

Chemical treatment can reliably provide exceptional reductions of turbidity and associated pollutants. Chemical treatment may be required to meet turbidity stormwater discharge requirements, especially when construction is to proceed through the wet season.

Conditions of Use

Formal written approval from Ecology is required for the use of chemical treatment regardless of site size. The City also requires review and approval. When approved, the chemical treatment systems must be included in the SWPPS portion of the project's CSWPP.

Design and Installation Specifications

Coagulation and flocculation have been used for over a century to treat water. It is used less frequently for the treatment of wastewater. The use of coagulation and flocculation for treating stormwater is a very recent application. Experience with the treatment of water and wastewater has resulted in a basic understanding of the process, in particular factors that affect performance. This experience can provide insights as to how to most effectively design and operate similar systems in the treatment of stormwater.

Fine particles suspended in water give it a milky appearance, measured as turbidity. Their small size, often much less than 1 μm in diameter, give them a very large surface area relative to their volume. These fine particles typically carry a negative surface charge. Largely because of these two factors, small size and negative charge, these particles tend to stay in suspension for extended periods of time. Thus, removal is not practical by gravity settling. These are called stable suspensions. Polymers, as well as inorganic chemicals such as alum, speed the process of clarification. The added chemical destabilizes the suspension and causes the smaller particles to agglomerate. The process consists of three steps: coagulation, flocculation, and settling or clarification. Each step is explained below as well as the factors that affect the efficiency of the process.

Coagulation: Coagulation is the first step. It is the process by which negative charges on the fine particles that prevent their agglomeration are disrupted. Chemical addition is one method of destabilizing the suspension, and polymers are one class of chemicals that are generally effective. Chemicals that are used for this purpose are called coagulants. Coagulation is complete when the suspension is destabilized by the neutralization of the negative charges. Coagulants perform best when they are thoroughly and evenly dispersed under relatively intense mixing. This rapid mixing involves adding the coagulant in a manner that promotes rapid dispersion, followed by a short time period for destabilization of the particle suspension. The particles are still very small and are not readily separated by clarification until flocculation occurs.

DRAFT

Flocculation: Flocculation is the process by which fine particles that have been destabilized bind together to form larger particles that settle rapidly. Flocculation begins naturally following coagulation, but is enhanced by gentle mixing of the destabilized suspension. Gentle mixing helps to bring particles in contact with one another such that they bind and continually grow to form "flocs." As the size of the flocs increases they become heavier and tend to settle more rapidly.

Clarification: The final step is the settling of the particles. Particle density, size and shape are important during settling. Dense, compact flocs settle more readily than less dense, fluffy flocs. Because of this, flocculation to form dense, compact flocs is particularly important during water treatment. Water temperature is important during settling. Both the density and viscosity of water are affected by temperature; these in turn affect settling. Cold temperatures increase viscosity and density, thus slowing down the rate at which the particles settle.

The conditions under which clarification is achieved can affect performance. Currents can affect settling. Currents can be produced by wind, by differences between the temperature of the incoming water and the water in the clarifier, and by flow conditions near the inlets and outlets.

Quiescent water such as that which occurs during batch clarification provides a good environment for effective performance as many of these factors become less important in comparison to typical sedimentation basins. One source of currents that is likely important in batch systems is movement of the water leaving the clarifier unit. Given that flocs are relatively small and light the exit velocity of the water must be as low as possible. Sediment on the bottom of the basin can be resuspended and removed by fairly modest velocities.

Coagulants: Polymers are large organic molecules that are made up of subunits linked together in a chain-like structure. Attached to these chain-like structures are other groups that carry positive or negative charges, or have no charge. Polymers that carry groups with positive charges are called cationic, those with negative charges are called anionic, and those with no charge (neutral) are called nonionic.

Cationic polymers can be used as coagulants to destabilize negatively charged turbidity particles present in natural waters, wastewater and stormwater. Aluminum sulfate (alum) can also be used as this chemical becomes positively charged when dispersed in water. In practice, the only way to determine whether a polymer is effective for a specific application is to perform preliminary or onsite testing.

Polymers are available as powders, concentrated liquids, and emulsions (which appear as milky liquids). The latter are petroleum based, which are not allowed for construction stormwater treatment. Polymer effectiveness can degrade with time and also from other influences. Thus, manufacturers' recommendations for storage should be followed. Manufacturer's recommendations usually do not provide assurance of water quality protection or safety to aquatic organisms. Consideration of water quality protection is necessary in the selection and use of all polymers.

Criteria for Chemical Treatment Product Use:

Chemically treated stormwater discharged from construction sites must be nontoxic to aquatic organisms. The Chemical Technology Assessment Protocol (CTAPE) must be used to evaluate chemicals proposed for stormwater treatment. Only chemicals approved by Ecology under the CTAPE may be used for stormwater treatment. The approved chemicals, their allowable application techniques (batch treatment or flow-through treatment), allowable application rates, and conditions of use can be found at the Department of Ecology Emerging Technologies website: <http://www.ecy.wa.gov/programs/wq/stormwater/newtech/technologies.html>.

Treatment System Design Considerations:

The design and operation of a chemical treatment system should take into consideration the factors that determine optimum, cost-effective performance. It is important to recognize the following:

- Only Ecology approved chemicals may be used and must follow approved dose rate.
- The pH of the stormwater must be in the proper range for the polymers to be effective, which is typically 6.5 to 8.5

- The coagulant must be mixed rapidly into the water to ensure proper dispersion.
- A flocculation step is important to increase the rate of settling, to produce the lowest turbidity, and to keep the dosage rate as low as possible.
- Too little energy input into the water during the flocculation phase results in flocs that are too small and/or insufficiently dense. Too much energy can rapidly destroy floc as it is formed.
- Care must be taken in the design of the withdrawal system to minimize outflow velocities and to prevent floc discharge. Discharge from a batch treatment system should be directed through a physical filter such as a vegetated swale that would catch any unintended floc discharge. Currently, flow-through systems always discharge through the chemically enhanced sand filtration system.
- System discharge rates must take into account downstream conveyance integrity.

Polymer Batch Treatment Process Description:

A batch chemical treatment system consists of the stormwater collection system (either temporary diversion or the permanent site drainage system), a storage pond, pumps, a chemical feed system, treatment cells, and interconnecting piping.

The batch treatment system shall use a minimum of two lined treatment cells in addition to an untreated stormwater storage pond. Multiple treatment cells allow for clarification of treated water while other cells are being filled or emptied. Treatment cells may be ponds or tanks. Ponds with constructed earthen embankments greater than six feet high or which impound more than 10 acre-feet require special engineering analyses. The Ecology Dam Safety Section has specific design criteria for dams in Washington State (see <http://www.ecy.wa.gov/programs/wr/dams/GuidanceDocs.html>).

Stormwater is collected at interception point(s) on the site and is diverted by gravity or by pumping to an untreated stormwater storage pond or other untreated stormwater holding area. The stormwater is stored until treatment occurs. It is important that the holding pond be large enough to provide adequate storage.

The first step in the treatment sequence is to check the pH of the stormwater in the untreated stormwater storage pond. The pH is adjusted by the application of carbon dioxide or a base until the stormwater in the storage pond is within the desired pH range, 6.5 to 8.5. When used, carbon dioxide is added immediately downstream of the transfer pump. Typically sodium bicarbonate (baking soda) is used as a base, although other bases may be used. When needed, base is added directly to the untreated stormwater storage pond. The stormwater is recirculated with the treatment pump to provide mixing in the storage pond. Initial pH adjustments should be based on daily bench tests. Further pH adjustments can be made at any point in the process.

Once the stormwater is within the desired pH range (dependent on polymer being used), the stormwater is pumped from the untreated stormwater storage pond to a treatment cell as polymer is added. The polymer is added upstream of the pump to facilitate rapid mixing.

After polymer addition, the water is kept in a lined treatment cell for clarification of the sediment-floc. In a batch mode process, clarification typically takes from 30 minutes to several hours. Prior to discharge samples are withdrawn for analysis of pH, flocculent chemical concentration, and turbidity. If both are acceptable, the treated water is discharged.

Several configurations have been developed to withdraw treated water from the treatment cell. The original configuration is a device that withdraws the treated water from just beneath the water surface using a float with adjustable struts that prevent the float from settling on the cell bottom. This reduces the possibility of picking up sediment-floc from the bottom of the pond. The struts are usually set at a minimum clearance of about 12 inches; that is, the float will come within 12 inches of the bottom of the cell. Other systems have used vertical guides or cables which constrain the float, allowing it to drift up and down with the water level. More recent designs have an H-shaped array of pipes, set on the horizontal.

This scheme provides for withdrawal from four points rather than one. This configuration reduces the likelihood of sucking settled solids from the bottom. It also reduces the tendency for a vortex to form. Inlet diffusers, a long floating or fixed pipe with many small holes in it, are also an option.

Safety is a primary concern. Design should consider the hazards associated with operations, such as sampling. Facilities should be designed to reduce slip hazards and drowning. Tanks and ponds should have life rings, ladders, or steps extending from the bottom to the top.

Polymer Flow-Through Treatment Process Description:

At a minimum, a flow-through chemical treatment system consists of the stormwater collection system (either temporary diversion or the permanent site drainage system), an untreated stormwater storage pond, and the chemically enhanced sand filtration system.

Stormwater is collected at interception point(s) on the site and is diverted by gravity or by pumping to an untreated stormwater storage pond or other untreated stormwater holding area. The stormwater is stored until treatment occurs. It is important that the holding pond be large enough to provide adequate storage.

Stormwater is then pumped from the untreated stormwater storage pond to the chemically enhanced sand filtration system where polymer is added. Adjustments to pH may be necessary before chemical addition. The sand filtration system continually monitors the stormwater for turbidity and pH. If the discharge water is ever out of an acceptable range for turbidity or pH, the water is recycled to the untreated stormwater pond where it can be retreated.

For batch treatment and flow-through treatment, the following equipment should be located in a lockable shed:

- The chemical injector.
- Secondary containment for acid, caustic, buffering compound, and treatment chemical.
- Emergency shower and eyewash.
- Monitoring equipment which consists of a pH meter and a turbidimeter.

System Sizing:

Certain sites are required to implement flow control for the developed sites. These sites must also control stormwater release rates during construction. Generally, these are sites that discharge stormwater directly, or indirectly, through a conveyance system, into a fresh water. System sizing is dependent on flow control requirements.

***Sizing Criteria for Batch Treatment Systems for Flow Control Exempt Water Bodies*:**

The total volume of the untreated stormwater storage pond and treatment ponds or tanks must be large enough to treat stormwater that is produced during multiple day storm events. It is recommended that at a minimum the untreated stormwater storage pond be sized to hold 1.5 times the runoff volume of the 10-year, 24-hour storm event. Bypass should be provided around the chemical treatment system to accommodate extreme storm events. Runoff volume shall be calculated using the methods presented in Chapter 3 of the *SWDM*. Worst-case land cover conditions (i.e., producing the most runoff) should be used for analyses (in most cases, this would be the land cover conditions just prior to final landscaping).

Primary settling should be encouraged in the untreated stormwater storage pond. A forebay with access for maintenance may be beneficial.

There are two opposing considerations in sizing the treatment cells. A larger cell is able to treat a larger volume of water each time a batch is processed. However, the larger the cell the longer the time required to empty the cell. A larger cell may also be less effective at flocculation and therefore require a longer settling time. The simplest approach to sizing the treatment cell is to multiply the allowable discharge flow rate times the desired drawdown time. A 4-hour drawdown time allows one batch per cell per 8-hour work period, given 1 hour of flocculation followed by two hours of settling.

If the discharge is directly to a direct discharge exempt receiving water in Section 1.2.3 (Core Requirement #3) of the *SWDM*, or to an infiltration system, there is no discharge flow limit.

Ponds sized for flow control water bodies must at a minimum meet the sizing criteria for direct discharge exempt receiving waters.

DRAFT

Sizing Criteria for Flow-Through Treatment Systems for Flow Control Exempt Water Bodies:

When sizing storage ponds or tanks for flow-through systems for flow control exempt water bodies, the treatment system capacity should be a factor. The untreated stormwater storage pond or tank should be sized to hold 1.5 times the runoff volume of the 10-year, 24-hour storm event minus the treatment system flowrate for an 8-hour period. For a chitosan-enhanced sand filtration system, the treatment system flowrate should be sized using a hydraulic loading rate between 6 to 8 gpm/ft². Other hydraulic loading rates may be more appropriate for other systems. Bypass should be provided around the chemical treatment system to accommodate extreme storms. Runoff volume shall be calculated using the methods presented in Chapter 3 of the *SWDM*. Worst-case land cover conditions (i.e., producing the most runoff) should be used for analyses (in most cases, this would be the land cover conditions just prior to final landscaping).

Sizing Criteria for Flow Control Water Bodies:

Sites that must implement flow control for the developed site condition must also control stormwater release rates during construction. Construction site stormwater discharges shall not exceed the discharge durations of the pre-developed condition for the range of pre-developed discharge rates from ½ of the 2-year flow through the 10-year flow as predicted by an approved continuous runoff model. The pre-developed condition to be matched shall be the land cover condition immediately prior to the development project. This restriction on release rates can affect the size of the storage pond and treatment cells.

The following is how WWHM can be used to determine the release rates from the chemical treatment systems:

1. Determine the pre-developed flow durations to be matched by entering the existing land use area under the “Pre-developed” scenario in WWHM. The default flow range is from ½ of the 2-year flow through the 10-year flow.
2. Enter the post developed land use area in the “Developed Unmitigated” scenario in WWHM.
3. Copy the land use information from the “Developed Unmitigated” to “Developed Mitigated” scenario.
4. While in the “Developed Mitigated” scenario, add a pond element under the basin element containing the post-developed land use areas. This pond element represents information on the available untreated stormwater storage and discharge from the chemical treatment system. In cases where the discharge from the chemical treatment system is controlled by a pump, a stage/storage/discharge (SSD) table representing the pond must be generated outside WWHM and imported into WWHM. WWHM can route the runoff from the post-developed condition through this SSD table (the pond) and determine compliance with the flow duration standard. This would be an iterative design procedure where if the initial SSD table proved to be inadequate, the designer would have to modify the SSD table outside WWHM and re-import in WWHM and route the runoff through it again. The iteration will continue until a pond that complies with the flow duration standard is correctly sized.

   Notes on SSD table characteristics:

   - The pump discharge rate would likely be initially set at just below ½ of the 2-year flow from the pre-developed condition. As runoff coming into the untreated stormwater storage pond increases and the available untreated stormwater storage volume gets used up, it would be necessary to increase the pump discharge rate above ½ of the 2-year. The increase(s) above ½ of the 2-year must be such that they provide some relief to the untreated stormwater storage needs but at the same time will not cause violations of the flow duration standard at the higher flows. The final design SSD table will identify the appropriate pumping rates and the corresponding stage and storages.
   - When building such a flow control system, the design must ensure that any automatic adjustments to the pumping rates will be as a result of changes to the available storage in accordance with the final design SSD table.

DRAFT

5. It should be noted that the above procedures would be used to meet the flow control requirements. The chemical treatment system must be able to meet the runoff treatment requirements. It is likely that the discharge flow rate of ½ of the 2-year or more may exceed the treatment capacity of the system. If that is the case, the untreated stormwater discharge rate(s) (i.e., influent to the treatment system) must be reduced to allow proper treatment. Any reduction in the flows would likely result in the need for a larger untreated stormwater storage volume.

If the discharge is to a municipal storm drainage system, the allowable discharge rate may be limited by the capacity of the public system. It may be necessary to clean the municipal storm drainage system prior to the start of the discharge to prevent scouring solids from the drainage system. If the municipal storm drainage system discharges to a water body not on the flow control exempt list, the project site is subject to flow control requirements. Obtain permission from the owner of the collection system before discharging to it.

If system design does not allow you to discharge at the slower rates as described above and if the site has a retention or detention pond that will serve the planned development, the discharge from the treatment system may be directed to the permanent retention/detention pond to comply with the flow control requirement. In this case, the untreated stormwater storage pond and treatment system will be sized according to the sizing criteria for flow-through treatment systems for flow control exempt water bodies described earlier except all discharge (water passing through the treatment system and stormwater bypassing the treatment system) will be directed into the permanent retention/detention pond. If site constraints make locating the untreated stormwater storage pond difficult, the permanent retention/detention pond may be divided to serve as the untreated stormwater storage pond and the post-treatment flow control pond. A berm or barrier must be used in this case so the untreated water does not mix with the treated water. Both untreated stormwater storage requirements, and adequate post-treatment flow control must be achieved. The post-treatment flow control pond's revised dimensions must be entered into the WWHM and the WWHM must be run to confirm compliance with the flow control requirement.

Maintenance Standards

Monitoring:

At a minimum, the following monitoring shall be conducted. Test results shall be recorded on a daily log kept on site. Additional testing may be required by the NPDES permit based on site conditions.

Operational Monitoring:

- Total volume treated and discharged.
- Flow must be continuously monitored and recorded at not greater than 15-minute intervals.
- Type and amount of chemical used for pH adjustment.
- Amount of polymer used for treatment.
- Settling time.

***Compliance Monitoring*:**

Influent and effluent pH, flocculent chemical concentration, and turbidity must be continuously monitored and recorded at not greater than 15-minute intervals. pH and turbidity of the receiving water.

Biomonitoring:

Treated stormwater must be non-toxic to aquatic organisms. Treated stormwater must be tested for aquatic toxicity or residual chemicals. Frequency of biomonitoring will be determined by Ecology.

Residual chemical tests must be approved by Ecology prior to their use.

If testing treated stormwater for aquatic toxicity, you must test for acute (lethal) toxicity. Bioassays shall be conducted by a laboratory accredited by Ecology, unless otherwise approved by Ecology. Acute toxicity tests shall be conducted per the CTAPE protocol.

DRAFT

Discharge Compliance:

Prior to discharge, treated stormwater must be sampled and tested for compliance with pH, flocculent chemical concentration, and turbidity limits. These limits may be established by the Construction Stormwater General Permit or a site-specific discharge permit. Sampling and testing for other pollutants may also be necessary at some sites. pH must be within the range of 6.5 to 8.5 standard units and not cause a change in the pH of the receiving water of more than 0.2 standard units. Treated stormwater samples and measurements shall be taken from the discharge pipe or another location representative of the nature of the treated stormwater discharge. Samples used for determining compliance with the water quality standards in the receiving water shall not be taken from the treatment pond prior to decanting. Compliance with the water quality standards is determined in the receiving water.

Operator Training:

Each contractor who intends to use chemical treatment shall be trained by an experienced contractor. Each site using chemical treatment must have an operator trained and certified by an organization approved by Ecology.

Standard BMPs:

Surface stabilization BMPs should be implemented on site to prevent significant erosion. All sites shall use a truck wheel wash to prevent tracking of sediment off site.

Sediment Removal and Disposal:

- Sediment shall be removed from the storage or treatment cells as necessary. Typically, sediment removal is required at least once during a wet season and at the decommissioning of the cells. Sediment remaining in the cells between batches may enhance the settling process and reduce the required chemical dosage.
- Sediment that is known to be non-toxic may be incorporated into the site away from drainages.

D.2.2.6 CONSTRUCTION STORMWATER FILTRATION

Purpose

Filtration removes sediment from runoff originating from disturbed areas of the site.

Background Information:

Filtration with sand media has been used for over a century to treat water and wastewater. The use of sand filtration for treatment of stormwater has developed recently, generally to treat runoff from streets, parking lots, and residential areas. The application of filtration to construction stormwater treatment is currently under development.

Conditions of Use

Traditional BMPs used to control soil erosion and sediment loss from sites under development may not be adequate to ensure compliance with the water quality standard for turbidity in the receiving water. Filtration may be used in conjunction with gravity settling to remove sediment as small as fine silt (0.5 μm). The reduction in turbidity will be dependent on the particle size distribution of the sediment in the stormwater. In some circumstances, sedimentation and filtration may achieve compliance with the water quality standard for turbidity.

The use of construction stormwater filtration does not require approval from Ecology as long as treatment chemicals are not used. Filtration in conjunction with polymer treatment requires testing under the Chemical Technology Assessment Protocol – Ecology (CTAPE) before it can be initiated. Approval from the appropriate regional Ecology office must be obtained at each site where polymers use is proposed prior to use. For more guidance on stormwater chemical treatment see BMP D.2.2.5.

DRAFT

Design and Installation Specifications

Two types of filtration systems may be applied to construction stormwater treatment: rapid and slow. Rapid sand filters are the typical system used for water and wastewater treatment. They can achieve relatively high hydraulic flow rates, on the order of 2 to 20 gpm/sf, because they have automatic backwash systems to remove accumulated solids. In contrast, slow sand filters have very low hydraulic rates, on the order of 0.02 gpm/sf, because they do not have backwash systems. Slow sand filtration has generally been used to treat stormwater. Slow sand filtration is mechanically simple in comparison to rapid sand filtration but requires a much larger filter area.

Filtration Equipment

Sand media filters are available with automatic backwashing features that can filter to 50 µm particle size. Screen or bag filters can filter down to 5 µm. Fiber wound filters can remove particles down to 0.5 µm. Filters should be sequenced from the largest to the smallest pore opening. Sediment removal efficiency will be related to particle size distribution in the stormwater.

Treatment Process Description

Stormwater is collected at interception point(s) on the site and is diverted to an untreated stormwater sediment pond or tank for removal of large sediment and storage of the stormwater before it is treated by the filtration system. The untreated stormwater is pumped from the trap, pond, or tank through the filtration system in a rapid sand filtration system. Slow sand filtration systems are designed as flow through systems using gravity.

Maintenance Standards

Rapid sand filters typically have automatic backwash systems that are triggered by a pre-set pressure drop across the filter. If the backwash water volume is not large or substantially more turbid than the untreated stormwater stored in the holding pond or tank, backwash return to the untreated stormwater pond or tank may be appropriate. However, other means of treatment and disposal may be necessary.

- Screen, bag, and fiber filters must be cleaned and/or replaced when they become clogged.
- Sediment shall be removed from the storage and/or treatment ponds as necessary. Typically, sediment removal is required once or twice during a wet season and at the decommissioning of the ponds.

Sizing Criteria for Flow-Through Treatment Systems for Flow Control Exempt Water Bodies:

When sizing storage ponds or tanks for flow-through systems for flow control exempt water bodies the treatment system capacity should be a factor. The untreated stormwater storage pond or tank should be sized to hold 1.5 times the runoff volume of the 10-year, 24-hour storm event minus the treatment system flowrate for an 8-hour period. For a chitosan-enhanced sand filtration system, the treatment system flowrate should be sized using a hydraulic loading rate between 6 to 8 gpm/ft². Other hydraulic loading rates may be more appropriate for other systems. Bypass should be provided around the chemical treatment system to accommodate extreme storms. Runoff volume shall be calculated using the methods presented in Chapter 3 of the *SWDM* (if no chemicals are proposed for use). Worst-case conditions (i.e., producing the most runoff) should be used for analyses (most likely conditions present prior to final landscaping).

Sizing Criteria for Flow Control Water Bodies:

Sites that must implement flow control for the developed site condition must also control stormwater release rates during construction. Construction site stormwater discharges shall not exceed the discharge durations of the pre-developed condition for the range of pre-developed discharge rates from 1/2 of the 2-year flow through the 10-year flow as predicted by an approved continuous runoff model. The pre-developed condition to be matched shall be the land cover condition immediately prior to the development project. This restriction on release rates can affect the size of the storage pond, the filtration system, and the flow rate through the filter system.

The following is how WWHM can be used to determine the release rates from the filtration systems:

1. Determine the pre-developed flow durations to be matched by entering the land use area under the "Pre-developed" scenario in WWHM. The default flow range is from ½ of the 2-year flow through the 10-year flow.
2. Enter the post developed land use area in the "Developed Unmitigated" scenario in WWHM.
3. Copy the land use information from the "Developed Unmitigated" to "Developed Mitigated" scenario.
4. There are two possible ways to model stormwater filtration systems:

   a) The stormwater filtration system uses an untreated stormwater storage pond/tank and the discharge from this pond/tank is pumped to one or more filters. In-line filtration chemicals would be added to the flow right after the pond/tank and before the filter(s). Because the discharge is pumped, WWHM can't generate a stage/storage /discharge (SSD) table for this system. This system is modeled the same way as described Ecology's BMP C250 (or BMP D.2.2.5 when seeking City approval for non-chemical treatment) and is as follows:

      While in the "Developed Mitigated" scenario, add a pond element under the basin element containing the post-developed land use areas. This pond element represents information on the available untreated stormwater storage and discharge from the filtration system. In cases where the discharge from the filtration system is controlled by a pump, a stage/storage/discharge (SSD) table representing the pond must be generated outside WWHM and imported into WWHM. WWHM can route the runoff from the post-developed condition through this SSD table (the pond) and determine compliance with the flow duration standard. This would be an iterative design procedure where if the initial SSD table proved to be out of compliance, the designer would have to modify the SSD table outside WWHM and re-import in WWHM and route the runoff through it again. The iteration will continue until a pond that enables compliance with the flow duration standard is designed.

      Notes on SSD table characteristics:

      - The pump discharge rate would likely be initially set at just below ½ if the 2-year flow from the pre-developed condition. As runoff coming into the untreated stormwater storage pond increases and the available untreated stormwater storage volume gets used up, it would be necessary to increase the pump discharge rate above ½ of the 2-year. The increase(s) above ½ of the 2-year must be such that they provide some relief to the untreated stormwater storage needs but at the same time they will not cause violations of the flow duration standard at the higher flows. The final design SSD table will identify the appropriate pumping rates and the corresponding stage and storages.
      - When building such a flow control system, the design must ensure that any automatic adjustments to the pumping rates will be as a result of changes to the available storage in accordance with the final design SSD table.

   b) The stormwater filtration system uses a storage pond/tank and the discharge from this pond/tank gravity flows to the filter. This is usually a slow sand filter system and it is possible to model it in WWHM as a Filter element or as a combination of Pond and Filter element placed in series. The stage/storage/discharge table(s) may then be generated within WWHM as follows:

      i. While in the "Developed Mitigated" scenario, add a Filter element under the basin element containing the post-developed land use areas. The length and width of this filter element would have to be the same as the bottom length and width of the upstream untreated stormwater storage pond/tank.

      ii. In cases where the length and width of the filter is not the same as those for the bottom of the upstream untreated stormwater storage tank/pond, the treatment system may be modeled as a Pond element followed by a Filter element. By having these two elements, WWHM would then generate a SSD table for the storage pond which then gravity flows to the Filter element. The Filter element downstream of the untreated stormwater storage pond would have a

DRAFT

storage component through the media, and an overflow component for when the filtration capacity is exceeded.

WWHM can route the runoff from the post-developed condition through the treatment systems in 4b and determine compliance with the flow duration standard. This would be an iterative design procedure where if the initial sizing estimates for the treatment system proved to be inadequate, the designer would have to modify the system and route the runoff through it again. The iteration would continue until compliance with the flow duration standard is achieved.

It should be noted that the above procedures would be used to meet the flow control requirements. The filtration system must be able to meet the runoff treatment requirements. It is likely that the discharge flow rate of ½ of the 2-year or more may exceed the treatment capacity of the system. If that is the case, the untreated stormwater discharge rate(s) (i.e., influent to the treatment system) must be reduced to allow proper treatment. Any reduction in the flows would likely result in the need for a larger untreated stormwater storage volume.

If system design does not allow you to discharge at the slower rates as described above and if the site has a retention or detention pond that will serve the planned development, the discharge from the treatment system may be directed to the permanent retention/detention pond to comply with the flow control requirements. In this case, the untreated stormwater storage pond and treatment system will be sized according to the sizing criteria for flow-through treatment systems for flow control exempt waterbodies described earlier except all discharges (water passing through the treatment system and stormwater bypassing the treatment system) will be directed into the permanent retention/detention pond. If site constraints make locating the untreated stormwater storage pond difficult, the permanent retention/detention pond may be divided to serve as the untreated stormwater discharge pond and the post-treatment flow control pond. A berm or barrier must be used in this case so the untreated water does not mix with the treated water. Both untreated stormwater storage requirements, and adequate post-treatment flow control must be achieved. The post-treatment flow control pond's revised dimensions must be entered into the WWHM and the WWHM must be run to confirm compliance with the flow control requirement.

D.2.2.7 HIGH PH NEUTRALIZATION USING CO_2

Purpose

When pH levels in stormwater rise above 8.5 it is necessary to lower the pH levels to the acceptable range of 6.5 to 8.5, this process is called pH neutralization. pH neutralization involves the use of solid or compressed carbon dioxide gas in water requiring neutralization. Neutralized stormwater may be discharged to surface waters under the Construction Stormwater General permit.

Neutralized process water such as concrete truck wash-out, hydro-demolition, or saw-cutting slurry must be managed to prevent discharge to surface waters. Any stormwater contaminated during concrete work is considered process wastewater and must not be discharged to surface waters.

Reason for pH Neutralization:

A pH level range of 6.5 to 8.5 is typical for most natural watercourses, and this neutral pH is required for the survival of aquatic organisms. Should the pH rise or drop out of this range, fish and other aquatic organisms may become stressed and may die.

Calcium hardness can contribute to high pH values and cause toxicity that is associated with high pH conditions. A high level of calcium hardness in waters of the state is not allowed.

The water quality standard for pH in Washington State is in the range of 6.5 to 8.5. Ground water standard for calcium and other dissolved solids in Washington State is less than 500 mg/l.

DRAFT

Conditions of Use

Causes of High pH:

High pH at construction sites is most commonly caused by the contact of stormwater with poured or recycled concrete, cement, mortars, and other Portland cement or lime containing construction materials. (See BMP D.2.2.1, Concrete Handling for more information on concrete handling procedures). The principal caustic agent in cement is calcium hydroxide (free lime).

Advantages of CO2 Sparging:

- Rapidly neutralizes high pH water.
- Cost effective and safer to handle than acid compounds.
- CO_2 is self-buffering. It is difficult to overdose and create harmfully low pH levels.
- Material is readily available.

The Chemical Process:

When carbon dioxide (CO_2) is added to water (H_2O), carbonic acid (H_2CO_3) is formed which can further dissociate into a proton (H^+) and a bicarbonate anion (HCO^{3-}) as shown below:

$$CO_2 + H_2O \leftrightarrow H_2CO_3 \leftrightarrow H^+ + HCO^{3-}$$

The free proton is a weak acid that can lower the pH. Water temperature has an effect on the reaction as well. The colder the water temperature is the slower the reaction occurs and the warmer the water temperature is the quicker the reaction occurs. Most construction applications in Washington State have water temperatures in the 50°F or higher range so the reaction is almost simultaneous.

Design and Installation Specifications

Treatment Process:

High pH water may be treated using continuous treatment, continuous discharge systems. These manufactured systems continuously monitor influent and effluent pH to ensure that pH values are within an acceptable range before being discharged. All systems must have fail safe automatic shut off switches in the event that pH is not within the acceptable discharge range. Only trained operators may operate manufactured systems. System manufacturers often provide trained operators or training on their devices.

The following procedure may be used when not using a continuous discharge system:

1. Prior to treatment, the appropriate jurisdiction should be notified in accordance with the regulations set by the jurisdiction.
2. Every effort should be made to isolate the potential high pH water in order to treat it separately from other stormwater onsite.
3. Water should be stored in an acceptable storage facility, detention pond, or containment cell prior to treatment.
4. Transfer water to be treated to the treatment structure. Ensure that treatment structure size is sufficient to hold the amount of water that is to be treated. Do not fill tank completely, allow at least 2 feet of freeboard.
5. The operator samples the water for pH and notes the clarity of the water. As a rule of thumb, less CO_2 is necessary for clearer water. This information should be recorded.
6. In the pH adjustment structure, add CO_2 until the pH falls in the range of 6.9 to 7.1. Remember that pH water quality standards apply so adjusting pH to within 0.2 pH units of receiving water (background pH) is recommended. It is unlikely that pH can be adjusted to within 0.2 pH units using dry ice. Compressed carbon dioxide gas should be introduced to the water using a carbon dioxide diffuser located near the bottom of the tank, this will allow carbon dioxide to bubble up through the water and diffuse more evenly.

DRAFT

7. Slowly discharge the water making sure water does not get stirred up in the process. Release about 80% of the water from the structure leaving any sludge behind.
8. Discharge treated water through a pond or drainage system.
9. Excess sludge needs to be disposed of properly as concrete waste. If several batches of water are undergoing pH treatment, sludge can be left in treatment structure for the next batch treatment. Dispose of sludge when it fills 50% of tank volume.

Sites that must implement flow control for the developed site must also control stormwater release rates during construction. All treated stormwater must go through a flow control facility before being released to surface waters which require flow control.

Maintenance Standards

Safety and Materials Handling:

- All equipment should be handled in accordance with OSHA rules and regulations.
- Follow manufacturer guidelines for materials handling.

Operator Records:

Each operator should provide:

- A diagram of the monitoring and treatment equipment.
- A description of the pumping rates and capacity the treatment equipment is capable of treating.

Each operator should keep a written record of the following:

- Client name and phone number.
- Date of treatment.
- Weather conditions.
- Project name and location.
- Volume of water treated.
- pH of untreated water.
- Amount of CO_2 needed to adjust water to a pH range of 6.9 to 7.1.
- pH of treated water.
- Discharge point location and description.

A copy of this record should be given to the client/contractor who should retain the record for 3 years.

D.2.2.8 PH CONTROL FOR HIGH PH WATER

Purpose

When pH levels in stormwater rise above 8.5 it is necessary to lower the pH levels to the acceptable range of 6.5 to 8.5, this process is called pH neutralization. Stormwater with pH levels exceeding water quality standards may be treated by infiltration, dispersion in vegetation or compost, pumping to a sanitary sewer, disposal at a permitted concrete batch plant with pH neutralization capabilities, or carbon dioxide sparging. BMP D.2.2.7, High pH Neutralization Using CO_2 gives guidelines for carbon dioxide sparging.

Reason for pH Neutralization:

A pH level range of 6.5 to 8.5 is typical for most natural watercourses, and this pH range is required for the survival of aquatic organisms. Should the pH rise or drop out of this range, fish and other aquatic organisms may become stressed and may die.

DRAFT

Conditions of Use

Causes of High pH:

High pH levels at construction sites are most commonly caused by the contact of stormwater with poured or recycled concrete, cement, mortars, and other Portland cement or lime containing construction materials. (See BMP D.2.2.1, Concrete Handling for more information on concrete handling procedures). The principal caustic agent in cement is calcium hydroxide (free lime).

Design and Installation Specifications

Disposal Methods:

Infiltration

- Infiltration is only allowed if soil type allows all water to infiltrate (no surface runoff) without causing or contributing to a violation of surface or ground water quality standards.
- Infiltration techniques should be consistent with Chapter 5 of the *SWDM*

Dispersion

- Dispersion techniques should be consistent with Appendix C of the *SWDM*

Sanitary Sewer Disposal

- Approval from King County and the City of Renton is required prior to disposal via the sanitary sewer.

Concrete Batch Plant Disposal

- Only permitted facilities may accept high pH water.
- Facility should be contacted before treatment to ensure they can accept the high pH water.

Stormwater Discharge

Any pH treatment options that generate treated water that must be discharged off site are subject to flow control requirements. Sites that must implement flow control for the developed site must also control stormwater release rates during construction. All treated stormwater must go through a flow control facility before being released to surface waters which require flow control.

D.2.2.9 USE OF HIGH PH SOIL AMENDMENTS ON CONSTRUCTION SITES

The use of soil amendments (including cement treated base [CTB] and cement kiln dust [CKD]) on development sites must be approved by the City. The approval process is described in “Processing Requirements for Use of Soil Amendments on Construction Sites” below.

Use of Soil Amendments

It is sometimes a construction practice to add soil amendments to the surfaces of some construction areas in order to stabilize the ground for building. This practice includes placing an additive on the ground then mixing with the soil to a specified depth and finally compacting the mix. When mixed with the soil, the moisture in the ground may allow these additives to create a chemical reaction that cures similar to concrete and may absorb excessive moisture to allow soils to be compacted. The end result is a stable site for constructing a road or building pad.

Because soil amendments may be rich in lime content and other material, water runoff from these areas can be affected. If not controlled and treated, this could result in a degradation of water quality and natural drainage systems. Because these additives come in a fine powder form, the actual application can create fugitive dust. When mixed with water, some additives can become corrosive.

Definitions

The following are definitions of soil amendment products that are allowed for use under these procedures:

DRAFT

1. Cement Kiln Dust (CKD) is a by-product in the manufacturing of cement[9].
2. Cement Treated Base (CTB) utilizes Portland Cement Type II as the soil additive.

CTB/CKD Soil Amendment BMPs

Table D.2.2.9.A on the following pages lists twelve BMP categories of action and specific BMPs for each category to be applied when proposing CTB/CKD soil amendments or using soil amendments onsite.

Note: Additional BMPs may be required to prevent adverse impacts to the public and/or the environment. It is the responsibility of the permit holder to remain in compliance with all other applicable local, state, and federal regulations.

TABLE D.2.2.9.A CTB/CKD SOIL AMENDMENT BMPS

Category of Action	Specific Action	CTB/CKD Best Management Practices
1. Materials Source Analysis	Solubility Testing & Specifications	A. If CKD is proposed, a chemical analysis of soluble pollutants of the product to be used will be provided to the Washington State Department of Ecology (Ecology) and the CED review staff in advance of any product is applied. B. CTB/CKD mixing percentage is anticipated to be approximately 3 percent to 5 percent. C. A Geotechnical Engineer will establish the mixing percentage for the onsite soils. D. All treatment procedures shall be directed, monitored, and verified by a Geotechnical Engineer. E. Soil amendments will never occur in excess of the ability of the onsite equipment and resources to meet all BMP requirements specified herein.
2. Site Preparation	Runoff Collection System	A. Areas that are to be treated as shown on the plan are flagged off to prevent equipment from leaving treated area and going onto untreated areas, and to prevent unauthorized equipment from entering the treated area. B. Assessment of surface runoff collection points are noted. C. Cutoff trenches, collection sumps, and pumps are installed. D. Sealed storage tanks will be properly sized to contain all runoff from treated areas. E. Sealed storage tanks shall be set up and ready for use to treat contact water. F. An approved wheel wash will be constructed at the construction exit, typically a paved ramp sump that utilizes high-pressure washers. G. Copies of Treatment Plan, Approval, and Contingency Plan area are required to be located on site.

[9] CKD is collected by air pollution control devices used to clean kiln exhaust during the manufacturing of Portland Cement. EPA has classified CKD a non-hazardous waste product provided management standards are followed for groundwater protection and control of fugitive dust releases.

CKD should not to be confused with Fly Ash, which is a by-product of burning coal or wood and incineration of other material. Fly ash can contain major oxides and trace metals, depending upon the fuel source, and is considered too hazardous for use as a soil amendment. Using this product is not authorized or endorsed by Ecology or the City.

DRAFT

TABLE D.2.2.9.A CTB/CKD SOIL AMENDMENT BMPS		
Category of Action	**Specific Action**	**CTB/CKD Best Management Practices**
3. Lay-down Mixing Equipment		A. Exposure of CTB/CKD materials to air to be minimized. Delivery tankers shall be set up to place CTB/CKD directly into spreading trucks or equipment. B. CTB/CKD operations are only allowed during daylight hours. C. Tarps or dust bags will be used over the discharge truck hose at unloading to prevent dust particles for becoming airborne. D. Unloading will occur at the lowest possible pump pressure. E. Unloading and mixing will be avoided on high wind days. PSAPCA Section 9.15 prohibits visible emissions of fugitive dust. F. CTB/CKD to be placed on ground by large wheeled spreaders designed for this purpose capable of measuring application. G. When spreading CTB/CKD it shall be kept 2–3 feet away from untreated areas boundaries to prevent the material from migration and contaminating outside the treatment zone. H. Treatment area will be kept damp/wet at all times CTB/CKD is being spread and mixed. Skirting around applicator/spreader and mixer is required to minimize CTB/CKD dust. I. CTB/CKD is to be roto-tilled into soil immediately after being spread onto soils and shall be done with a skirted tiller. J. Direct auguring machine that measures, spreads, and mixes CTB/CKD in one operation is preferred. K. Compaction will be complete within 2 hours after CTB/CKD application.
4. Site Management	Work Progress and Weather Conditions	A. Dust suppression by use of water trucks shall be used on areas where work on dry soil is performed and potential airborne contamination may occur. B. The volume of CTB/CKD allowed on site will be limited to the amount that can be used within a normal workday. Every effort will be made to forecast the daily delivery rate to match the daily onsite use rate. C. CTB/CKD will not be added to soils at a rate that exceeds the ability of onsite resources to immediately commence mixing and compacting. D. No work will occur in rain heavier than drizzle, or under drizzle that exceeds 6 hours duration, or under any rainfall which generates runoff from the areas being worked. E. Should the weather change to stop the application, remaining CTB/CKD will be covered and contained to prevent stormwater from entering storage containment, and causing runoff. F. All vehicles and equipment leaving the treatment area/site must be cleaned/washed to prevent CTB/CKD from leaving site. Wash water will be contained and treated as needed. G. CTB/CKD contact water in the wheel wash will be removed from the site via a vactor truck for transport to an approved off-site treatment or disposal facility in accordance with all federal, state, and local laws and regulations; or, if permitted, to the sanitary sewer system.

DRAFT

TABLE D.2.2.9.A CTB/CKD SOIL AMENDMENT BMPS		
Category of Action	**Specific Action**	**CTB/CKD Best Management Practices**
5. Surface Water Collection		A. Surface runoff from the treated areas is to be collected and stored in onsite sealed treatment tanks. B. A rigid schedule of TESC inspection, maintenance, and drainage controls will be maintained. C. Temporarily plugging and using detention facilities is not allowed as a storage practice. D. Runoff from compacted areas amended with CTB/CKD will be directed to previously sealed tank(s) until pH levels of water are verified to be within acceptable background water limits. No uncontrolled discharge or infiltration from the sealed tank(s) will be allowed. E. Drainage from areas amended with CTB/CKD within the past 72 hours will be prevented from co-mingling with any other project drainage.
6. Discharge Compliance	Applicable Regulations	A. Any and all discharges from this site will be in compliance with all applicable federal, state, and local laws and regulations pertaining to health and safety, water, air, waste, and wildlife, including the Federal Clean Water Act, Clean Air Act, and Endangered Species Act. Laboratory analysis of water is required prior to discharge to verify compliance. B. No infiltration is allowed to occur if pH readings are above 8.5 standard pH units, or below 6.5 standard pH units. C. A pH meter must be used to determine levels. pH meter is to be calibrated following proper QA/QC procedures. Fresh buffers are to be available to re-calibrate as needed. D. A log of turbidity and pH readings will be kept on site for inspection. E. All treatment of water must be directed, bench tested, monitored and verified by a qualified water quality specialist. F. Treated area water runoff shall not enter the permanent stormwater system. G. Stormwater drainage system within treatment area is to be cleaned out prior to use for regular water runoff conveyance from untreated areas. Water from cleanout is to be tested and treated following the approved treatment criteria.

DRAFT

TABLE D.2.2.9.A CTB/CKD SOIL AMENDMENT BMPS		
Category of Action	**Specific Action**	**CTB/CKD Best Management Practices**
7. Natural Treatment and Discharge		A. The preferred method of disposal of the treatment water will be discharge to the sanitary sewer, provided a permit is obtained to do so. B. If infiltration is proposed, the area of infiltration is to be identified, capacity confirmed, and a contingency discharge plan in place in the event facilities fail to infiltrate. C. For infiltration, pH limits shall be strictly adhered to. D. If a permit to discharge to the sanitary sewer is not obtained, a National Pollutant Discharge Elimination System (NPDES) discharge permit is required from Ecology. The retention volume of the lined pond(s) will also be increased to ensure complete control of the retained volume. Monitoring, bench testing, and controlled discharge rates, with prior approval by Ecology, would be needed prior to discharge to an approved off-site surface drainage system. Sites that currently have NPDES permits will need to amend permit prior to discharge to cover this action. City approval is still required. E. Per RMC 4-6-030, discharges into receiving drainage systems shall not have acid or basic pH levels. F. Sealed storage tanks shall be used to reduce turbidity and pH before discharge.
8. Chemical Treatment		A. Carbon dioxide sparging (dry ice pellets) may be used as the chemical treatment agent to reduce the water pH. B. Any means of water treatment to reduce pH will require an NPDES discharge permit from Ecology. Permit would only be granted after bench testing performed by an independent qualified party. C. Active mixing will cease if the residual retention water volume falls below the ability to treat and properly dispose of contact storm water. D. Discharge would only occur after the approval of Ecology, following bench testing and consultation with Ecology. E. All materials for chemical treatment will be on site and property stored, during all phases of CTB/CKD treatment.
9. Water Quality	Monitoring	A. Turbidity and pH will be monitored on a twice-daily basis, prior to operations and immediately upon ceasing operations, and these measurements will be recorded. Monitoring will also occur immediately after any storm event of ½ inch in 24 hours, or water migration to the retention pond(s), and the measurements recorded. If the pH approaches 8.0, monitoring frequency will increase. B. Turbidity and pH monitoring will occur in all treatment facilities, stormwater detention facilities, infiltration areas (if infiltration is used), and in all surface water areas adjacent to site where stormwater potentially discharges. Additional upstream surface water sites will be established to determine background levels of turbidity and pH. C. All water quality monitoring data will be conducted and evaluated by an independent, qualified party and conducted using professionally supportable test protocols and QA/QC procedures.

DRAFT

TABLE D.2.2.9.A CTB/CKD SOIL AMENDMENT BMPS		
Category of Action	**Specific Action**	**CTB/CKD Best Management Practices**
10. Reporting	Ecology and CED	A. All water quality monitoring data will be included in weekly CED TESC reports to CED, and in weekly NPDES reports to Ecology. B. All work, testing, and monitoring associated with the application of CTB/CKD shall be observed by engineer. The engineer shall prepare and submit a report to the assigned CED project inspector indicating BMPs were/were not being met. C. Copies of all reports and logs will be available on site during the soil and surface runoff treatment activities.
Other elements to consider:		
11. Water Quality – Soils	Source Controls	A. There may be very small amounts of concrete washout produced onsite as a result of construction of erosion control measures during reclamation. Concrete washout, if any, would be retained in a lined enclosure of at least 6-ml Visqueen or plastic sheeting, with no outlet. The washout retention enclosure would be isolated and separate from any CTB/CKD area runoff. Contents of the lined concrete washout enclosure will be removed from the site via a vactor truck for disposal in an approved off-site treatment or disposal facility in accordance with all federal, state, and local laws and regulations. Signed trip tickets, as proof of proper disposal, will be provided to Ecology and CED.
12. Water Quality – pH	Cover Measures	A. Areas amended with CTB/CKD for compaction after CTB/CKD addition will be covered with plastic or Visqueen sheeting, or other impervious material by the end of each working day. B. Temporary cover will be maintained over all compacted areas amended with CTB/CKD until testing confirms that pH levels are stabilized to background measurements. [Note: Curing to avoid pH effects has no relationship to the rate at which material can be compacted in multiple lifts. Compaction will commence immediately after application and mixing, and multiple lifts will occur as quickly as each lift is compacted and ready to accept the next.] C. Should weather conditions prevent mixing, any unmixed CTB/CKD remaining on site will be enclosed in a sealed containment, such as portable silo, or removed from site.

Processing Requirements for Use of High pH Soil Amendments on Construction Sites[10]

Purpose

This section establishes procedures for implementing BMPs when using high pH soil amendments on construction sites. See Table D.2.2.9.A for a description of the BMPs. This section outlines an expedited review process and typical approval conditions that will allow contractors and builders to use soil amendments without impacting water quality. Additional BMPs may be required based upon site specific conditions that may warrant more protection. This policy is limited to those amendments, defined below, commonly known to add stability to sloppy soil conditions but which can alter water runoff quality.

Authority: RMC 4-6-030(J) prohibits discharges of polluted or contaminated water into surface or storm water drainage systems. The purpose of this statute is to protect surface and ground water by regulating the discharge of potentially contaminated surface water. If soil amendments are proposed with an initial application, an environmental review is required, under SEPA, which assesses impacts, provides public input and mitigated conditions for its use.

[10] Excerpted from the King County *Stormwater Pollution Prevention Manual (SPPM)*, BMP Info Sheet #11

DRAFT

The City of Renton also requires an engineered design for use of a soil amendment on road surfaces or around drainage systems (see Appendix C). The design may incorporate a thorough assessment of soil composition and laboratory analysis. The *SWDM* authorizes CED to adopt BMPs for the control and protection of surface water. Currently, for all sites, the BMPs established in this policy are the minimum standards that shall be applied.

Procedure

An applicant may apply for use of soil amendments allowed under this policy anytime during the permit application review or after the permit has been issued and site construction is underway. After making a submittal to CED, the applicant may receive approval conditions. Conditions may vary from site to site, but typically will include many of the BMPs included in this policy.

Applicants should identify any use of soil amendments as early in the process as possible to avoid delays in obtaining approval for use during the construction phase. If a site has known soil and water conditions that might make work during rainy periods difficult, they may want to plan to use soil amendments on their site. Obviously, if this issue is addressed at the permit review phase, implementation in the field can occur without delay. However, because of the potential risks of surface water pollution discharge and required treatment, an environmental assessment will be necessary before conditions for use can be established.

Limitations

This policy applies to the intended use of soil amendments in areas that will be covered by impervious surfaces. For areas not covered by impervious surfaces, additional reviews, study, and BMPs may be required. In addition, alterations to original approved use plans will require a resubmittal for approval. Approval for the use of the soil amendments can only occur by strictly following the procedures contained herein and not by any other approval obtained from CED.

Submittal Requirements

To obtain approval for the use of soil amendments allowed under this policy, the applicant shall prepare a submittal package to CED that includes the following:

- Letter to CED requesting use of soil amendments at a construction site allowed under this policy.
- Document or letter attachment that identifies source of materials and description of mixing and laydown process, plan for disposal of treated contact water, sanitary sewer permits and/or BMPs, and special precautions proposed to prevent the contamination of surface or stormwater drainage systems, other than ‘sealed’ drainage systems.
- Site Plan: Show a site plan map which:
  1) Shows overall grading plan showing existing and proposed contours.
  2) Identifies sensitive areas and permanent or temporary drainage facilities.
  3) Identifies areas that soil amendment is planned.
  4) Shows depths of application and percent of amendment to be used.
  5) Shows location of special wheel wash facility.
  6) Shows location of collection and conveyance swales or pipes for contact water.
  7) Shows location of sealed storage/treatment tanks or temporary ponds (fully lined).
  8) Identifies any discharge point from the site into natural drainage systems.
  9) Includes soil log locations that identify seasonal high groundwater areas.
- Report and analysis of engineering mix design which includes depths of application and percent of amendment usage.
- For proposals that use CKD and CKD additive, provide analysis of source material for soluble contaminants. Include a description of fuel source.

DRAFT

- Monitoring criteria, including locations for pH and turbidity testing.
- Provide contingency plan should use of soil amendment and site and weather conditions result in polluted or contact water entering natural drainage systems.
- Provide contact information or water quality specialist assigned to monitor application of soil amendments and BMPs.

If the project is under construction, the applicant shall contact the CED inspector assigned to the project to initiate a review for compliance with the BMPs and requirements herein. Otherwise contact the planner or engineer assigned to review the permit or land use application.

Review and Approval

Once the review has been completed, the applicant shall be notified by letter which stipulates the conditions of approval. Prior to authorizing the use of soil amendments at the site, the applicant shall provide a special restoration financial guarantee cash deposit in the amount as determined by the existing, established processes. Note: It remains the applicant/contractor's responsibility to comply with any other applicable state or federal regulations such as use of NIOSH respiratory protection, safety goggles, gloves and protective clothing whenever using hazardous materials.

Applicable Standards

Typically, all proposals using soil amendments shall have these conditions as standard requirements:

1. Prior to any application of CKD/CTB, the general contract shall hold a preconstruction meeting with the assigned CED inspector at least 3 working days in advance.
2. CKD will not be permitted for use in areas adjacent to or in proximity to wetlands and streams areas. CTB may or may not be permitted in these areas.
3. Areas not covered by impervious surfaces:
   - CKD will not be permitted in areas that will not be covered by impervious surfaces.
   - If CTB is proposed in these areas, an analysis of whether or not the soil amendment will change the post-development runoff characteristics and the permanent stormwater facilities were sized appropriately shall be submitted for review. Use of CTB in areas not permanently covered by impervious surface may require re-sizing of the permanent stormwater facilities.
4. If CKD is proposed, the contractor shall provide mill certificates verifying the product composition. The contractor/developer must be prepared to follow BMPs during and after soil treatment and be prepared to treat runoff from the treatment area(s) immediately. All stormwater collection systems must be in place and all equipment (pH meters, dry ice, etc.) must be onsite.
5. Collection of stormwater (see BMP #5 in Table D.2.2.9.A):
   - Stormwater from the application area shall be kept separate from and prevented from comingling with uncontaminated stormwater.
   - During the application of CKD/CTB, stormwater runoff shall be collected in temporary collection systems and shall not be allowed to enter the permanent facilities. Permanent drainage systems shall be capped to prevent contact stormwater from entering the inlets of the catch basins. Stormwater from the application area shall not be collected in the temporary/permanent detention ponds, even if the underlying soils are 'impermeable.'
6. Treatment: If necessary, pH adjustment shall be done in the collection tanks or temporary ponds and not in the permanent detention ponds.
7. Disposal options: The proposal to use CKD/CTB must contain a disposal plan that may include one or a combination of sanitary sewer or approved offsite disposal. Treated contact water may be discharged to the sanitary sewer if authorizations are obtained from the King County and the City of Renton. All discharge conditions (e.g., pH, settleable solids) must be followed. If a sanitary sewer is not available at the site, contact water may be transported offsite to an approved site for disposal and proof of

DRAFT

proper disposal must be submitted to the City. All authorizations for disposal shall be obtained prior to CKD/CTB application.

- Infiltration: Depending on the site conditions, pH-adjusted stormwater may be infiltrated. Prior to infiltration, pH must be between 6.5 and 8.5.
- Surface Water: Contact water from the application area shall not be discharged to surface waters, even if treatment has adjusted the pH.

8. Emergency backup plan: An emergency backup plan must be prepared and ready to implement to handle large quantities of stormwater.
9. Monitoring shall be conducted to determine that contact stormwater is not leaving the site. Offsite monitoring shall also be conducted to identify impacts to adjacent water bodies. Bonding may be required to cover mitigation of impacts and restoration.
10. A soils specialist will establish the mixing percentage for onsite soils. Soil amendments will never occur in excess of the ability of the onsite equipment and resources to meet all BMP requirements.
11. For sites one acre or larger, a Construction Stormwater General permit must be obtained from Ecology. Construction Stormwater General permits and 'Stormwater Pollution Prevention Plans (SWPPPs) must be amended and the use of CKD/CTB must be approved by Ecology prior to application.

The contractor/developer shall comply will all federal, state, and local regulations. A health and safety plan may be required for the protection of CED inspectors.

Additional BMPs may be applicable depending on mix design, proximity of wetlands or streams (e.g., within 300 feet of class/type I and 100 feet or less for other types) and site conditions.

D.2.2.10 MAINTAIN PROTECTIVE BMPS

Pollutant protection measures shall be maintained to ensure continued performance of their intended function. Reporting and documentation shall be kept current and made available to CED as indicated.

Purpose: The purpose of maintaining protective BMPs is to provide effective pollutant protection when and where required by the plan and the project, and to provide timely and relevant project information.

When to Maintain: Protection measures shall be monitored per Section D.2.4.4 at a minimum, continuously during operation, and promptly maintained to fully functioning condition as necessary to ensure continued performance of their intended function. Documentation shall be kept current per specific BMP requirements.

Measures to Use:

1. Maintain and repair all pollutant control BMPs as needed to ensure continued performance of their intended function in accordance with BMP specifications.
2. Maintain and repair storage locations for equipment and materials associated with BMP processes. Conduct materials disposal in compliance with City requirements.
3. As required, provide current reporting and performance documentation at an accessible location for the site inspector and other CED staff.
4. Remove all temporary pollutant control BMPs prior to final construction approval, or within 30 days after achieving final site stabilization or after the temporary BMPs are no longer needed.

D.2.2.11 MANAGE THE PROJECT

SWPPP requirements shall be implemented and managed as part of the overall CSWPP plan. Concrete construction and its impacts are primary among pollutant concerns on site development projects. Fueling operations and materials containment of treatment chemicals and other project materials are also typical

DRAFT

pollutant concerns. Operations that produce these and other pollutants are often conducted by subcontractors and their laborers, yet may require specific protective measures, documentation and reporting. Protective measures and BMPs need to be made available prior to construction and suitable oversight provided to ensure inspection, monitoring and documentation requirements are met.

Projects shall assign a qualified CSWPP Supervisor (Section D.2.3.1) to be the primary contact for SWPPP and ESC issues and reporting, coordination with subcontractors and implementation of the CSWPP plan as a whole.

Measures to Use:

1. Phase development projects to the maximum degree practicable and take into account seasonal work limits.
2. Inspection and monitoring – Inspect, maintain, and repair all BMPs as needed to ensure continued performance of their intended function. Conduct site inspections and monitoring in accordance with the Construction Stormwater General Permit and City requirements. Coordinate with subcontractors and laborers to ensure the SWPPP measures are followed.
3. Documentation and reporting – Inspect, maintain, and repair all BMPs as needed to ensure continued performance of their intended function. Document site inspections and monitoring in accordance with the Construction Stormwater General Permit, specific BMP conditions and City requirements. Log sheets provided in Reference Section 8 may be used if appropriate. Follow reporting requirements and provide documentation as requested to CED staff.
4. Maintaining an updated construction SWPPP – Maintain, update, and implement the SWPPP in accordance with the Construction Stormwater General Permit and City requirements. Obtain approval for specific SWPPP measures (e.g., chemical treatments of stormwater) well in advance of need. Coordinate SWPPP plan updates with the site inspector (see Section D.2.4.1).

D.2.3 CSWPP PERFORMANCE AND COMPLIANCE PROVISIONS

The changing conditions typical of construction sites call for frequent field adjustments of existing ESC and SWPPS measures or additional ESC and SWPPS measures in order to meet required performance. In some cases, strict adherence to specified measures may not be necessary or practicable based on site conditions or project type. In other cases, immediate action may be needed to avoid severe impacts. Therefore, careful attention must be paid to ESC and SWPPS performance and compliance in accordance with the provisions contained in this section.

D.2.3.1 CSWPP SUPERVISOR

For projects in Targeted, Full, or Large Project Drainage Review, or projects in Directed Drainage Review as determined by CED review staff, the applicant must designate a **CSWPP supervisor** who shall be responsible for the performance, maintenance, and review of ESC and SWPPS measures and for compliance with all permit conditions relating to CSWPP as described in the *CSWPP Standards*. The applicant's selection of a CSWPP supervisor must be approved by the City. (City approval may be rescinded for non-compliance, requiring the applicant to select another CSWPP supervisor and obtain City approval prior to continuing work on the project site.)

For projects that disturb one acre or more of land, the CSWPP supervisor must be a **Certified Professional in Erosion and Sediment Control** (see <www.cpesc.net> for more information) or a **Certified Erosion and Sediment Control Lead** whose certification is recognized by the City.[11] The City may also require a certified ESC professional for sites smaller than one acre of disturbance if CED determines that onsite ESC measures are inadequately installed, located, or maintained.

[11] The City's recognition of certification means that the individual has taken an approved third party training program and has passed the approved test for that training program.

DRAFT

For **larger, more sensitive sites**, the City may require a certified ESC professional with several years of experience in construction supervision/inspection and a background in geology, soil science, or agronomy. Typically, if a geotechnical consultant is already working on the project, the consultant may also be a certified ESC professional designated as the CSWPP supervisor. The design engineer may also be qualified for this position. This requirement shall only be used for sensitive sites that pose an unusually high risk of impact to surface waters as determined by CED. At a minimum, the project site must meet all of the following conditions in order to require the applicant to designate as the CSWPP supervisor a certified ESC professional with such expertise:

- Alderwood soils or other soils of Hydrologic Group C or D
- Five acres of disturbance
- Large areas (i.e., two or more acres) with slopes in excess of 10 percent.

Proximity to streams or wetlands or phosphorus-sensitive lakes, such as Lake Sammamish, shall also be a factor in determining if such expertise in the CSWPP supervisor is warranted. However, proximity alone shall not be a determining factor because even projects that are a considerable distance from surface waters can result in significant impacts if there is a natural or constructed drainage system with direct connections to surface waters.

The name, address, and phone number of the CSWPP supervisor shall be supplied to the City prior to the start of construction. A sign shall be posted at all primary entrances to the site identifying the CSWPP supervisor and his/her phone number. The requirement for a CSWPP supervisor does not relieve the applicant of ultimate responsibility for the project and compliance with Renton Municipal Code.

D.2.3.2 MONITORING OF DISCHARGES

The CSWPP supervisor shall have a turbidity meter onsite and shall use it to monitor surface and storm water discharges from the ***project site*** and into onsite wetlands, streams, or lakes whenever runoff occurs from onsite activities and during storm events. The CSWPP supervisor shall keep a log of all turbidity measurements taken onsite and make it available to CED upon request. If the ***project site*** is subject to a NPDES general permit for construction issued by the Washington State Department of Ecology (Ecology), then the project must comply with the monitoring requirements of that permit.

The CSWPP supervisor shall also use the specific SWPPS BMP procedures for monitoring surface and stormwater discharge for pollutants and acceptable discharge levels. The CSWPP supervisor shall keep logs as required by the procedures of all measurements taken onsite and make them available to CED on request.

D.2.3.3 ESC PERFORMANCE

ESC measures shall be applied/installed and maintained so as to prevent, to the maximum extent practicable, the transport of sediment from the project site to downstream drainage systems or surface waters or into onsite wetlands, streams, or lakes or onto adjacent properties. This performance is intended to be achieved through proper selection, installation, and operation of the above ESC measures as detailed in the *CSWPP Standards* (detached Appendix D) and approved by the City. However, the CSWPP supervisor designated per Section D.2.3.1 or the City may determine at any time during construction that such approved measures are not sufficient and additional action is required based on one of the following criteria:

1. IF a turbidity test of surface and storm water discharges leaving the project site is greater than the benchmark value of 25 nephelometric turbidity units (NTU) set by the Washington State Department of Ecology, but less than 250 NTU, the CSWPP Supervisor shall do all of the following:

    a) Review the ESC plan for compliance and make appropriate revisions within 7 days of the discharge that exceeded the benchmark of 25 NTU, AND

b) Fully implement and maintain appropriate ESC measures as soon as possible but no later than 10 days after the discharge that exceeded the benchmark, AND

c) Document ESC implementation and maintenance in the site log book.

2. IF a turbidity test of surface or storm water entering onsite wetlands, streams, or lakes indicates a turbidity level greater than 5 NTU above background when the background turbidity is 50 NTU or less, or 10% above background when the background turbidity is greater than 50 NTU, then corrective actions and/or additional measures beyond those specified in *SWDM* Section 1.2.5.1 shall be implemented as deemed necessary by the CED inspector or onsite CSWPP supervisor.

3. IF discharge turbidity is 250 NTU or greater, the CSWPP Supervisor shall do all of the following:

   a) Notify the City by telephone, AND

   b) Review the ESC plan for compliance and make appropriate revisions within 7 days of the discharge that exceeded the benchmark of 25 NTU, AND

   c) Fully implement and maintain appropriate ESC measures as soon as possible but no later than 10 days after the discharge that exceeded the benchmark, AND

   d) Document ESC implementation and maintenance in the site log book. AND

   e) Continue to sample discharges until turbidity is 25 NTU or lower, or the turbidity is no more than 10% over background turbidity.

4. IF the City determines that the condition of the construction site poses a **hazard to adjacent property** or may **adversely impact drainage facilities or water resources**, THEN additional measures beyond those specified in *SWDM* Section 1.2.5.1 may be required by the City.

D.2.3.4 SWPPS PERFORMANCE

SWPPS measures shall be applied/installed and maintained so as to prevent, reduce, or eliminate the discharge of pollutants to onsite or adjacent stormwater systems or watercourses or onto adjacent properties. This performance is intended to be achieved through proper selection, installation, and operation of the above SWPPS measures as detailed in the *CSWPP Standards* (detached Appendix D) and approved by the City. However, the CSWPP supervisor designated per Section D.2.3.1 or the City may determine at any time during construction that such approved measures are not sufficient and additional action is required based on the criteria described in the specific SWPPS BMP standard and/or conditions of an approved adjustment.

D.2.3.5 FLEXIBLE COMPLIANCE

Some projects may meet the intent of Core Requirement #5 while varying from specific CSWPP requirements in this appendix. If a project is designed and constructed such that it meets the intent of the core requirement, the City may determine that strict adherence to a specific ESC requirement is unnecessary; an approved adjustment (see Section 1.4) from the *SWDM* is not required in these circumstances. Certain types of projects are particularly likely to warrant this greater level of flexibility; for instance, projects on relatively flat, well drained soils, projects that are constructed in closed depressions, or projects that only disturb a small percentage of a forested site may meet the intent of this requirement with very few ESC measures. Note, however, that SWPPS requirements may actually be emphasized on well-drained soils, particularly in groundwater protection or well-protection areas, or in close proximity to water bodies.

D.2.3.6 ROADS AND UTILITIES COMPLIANCE

Road and utility projects often pose difficult erosion control challenges because they frequently cross surface waters and because narrow right-of-way constrains areas available to store and treat sediment-laden water. In most cases, the standards of this appendix may be applied to such linear projects without

modification. For instance, the ability to use perimeter control rather than a sediment retention facility for small drainage areas (see Section D.2.1.3) will apply to many of these projects.

However, there may be some projects that cannot reasonably meet the standards of Core Requirement #5 and this appendix. In these cases, other measures may be proposed that will provide reasonable protection. An adjustment is not required for such projects, unless the City determines that measures proposed by the applicant fail to meet the intent of Core Requirement #5 and this appendix, and that significant adverse impacts to surface water may result. Examples of other measures that may be taken in lieu of the standards of this appendix are:

1. Phasing the project so that the site is worked progressively from end to end, rather than clearing and grubbing the entire length of the project. This results in smaller exposed areas for shorter durations, thus reducing the erosion risk. It is recommended that there be no more than 500 feet of open trench during any phase of construction.
2. Placement of excavated materials from utility trenches on the upslope side of the excavation, to minimize transport of sediment outside of the project area.
3. Mulching and vegetating cut and fill slopes as soon as they are graded. Frequently, this is done at the end of construction when paving or utility installation is complete. Vegetating these areas at the start of the project stabilizes those areas most susceptible to erosion.
4. Protecting all catch basin inlets with catch basin inserts or other inlet protection when these do not drain to ponds or traps. This will not provide the same level of protection as a sediment pond or trap, but can remove most of the sand-sized material entrained in the runoff.
5. Phasing the project so that all clearing and grading in critical area buffers occurs in the dry season. This substantially reduces the chance of erosion and allows for rapid revegetation in the late summer and early fall.
6. Using approved flocculent or other chemical treatment approved by the City to reduce the turbidity of water released from sediment ponds.
7. Hiring a private consultant with expertise in ESC to review and monitor the site.
8. Limiting employee/contractor parking and overnight/weekend parking of construction vehicles to dedicated and controlled areas prepared for drip and spill control. Options in the right-of-way for such areas can be limited.

If alternatives are used, it may be appropriate to develop a monitoring program that would monitor compliance with the performance standard of Core Requirement #5 and/or impacts to nearby water resources. Of particular concern are impacts to salmonid spawning gravels. McNeil sampling is a possible method of sampling to determine impacts to spawning gravels (see Section D.2.4.3).

D.2.3.7 ALTERNATIVE MEASURES

In general, the *SWDM* only contains those BMPs that are standards of the local industry. There are a variety of other BMPs available that may also be used, even though they are not included in this appendix. Such alternatives may be approved without an adjustment if the alternative will produce a compensating or comparable result with the measures in this appendix. Variations on or modifications of the BMPs in this appendix may also be granted based on the same criteria.

An adjustment may be required for products or techniques that are new and untested (see Section 1.4.4 of the *SWDM*). In addition, the new product or technique must be approved through the state Department of Ecology's *CTAPE program*.[12] The intent of this requirement is not to discourage new techniques, but to

[12] CTAPE stands for Chemical Technology Assessment Protocol – Ecology. For more information, see Ecology's website at <http://www.ecy.wa.gov/programs/wq/stormwater/newtech/tape_ctape.htm>.

ensure that new techniques are monitored and documented for adequacy and possible inclusion in subsequent versions of the *SWDM*.

D.2.4 CSWPP IMPLEMENTATION REQUIREMENTS

This section describes the CSWPP implementation requirements that are required at each construction site. The measures and practices correspond to the implementation requirements in Core Requirement #5. Three of the sections (the CSWPP report (Section D.2.4.1, below), CSWPP maintenance requirements (Section D.2.4.4), and final site stabilization (Section D.2.4.5) are required of every project. The rest of the sections are special requirements that may apply to the project depending on site conditions and project type. The introductory paragraphs at the beginning of most sections present the purpose of the measures and when they should be applied to the site. Compliance with the implementation requirements (as appropriate for the site) ensures compliance with the CSWPP measures. Note, however, that additional measures shall be required by the City if the existing standards are insufficient to protect adjacent properties, drainage facilities, or water resources.

D.2.4.1 CSWPP PLAN

A ***CSWPP plan***, containing the ESC plan and the SWPPS plan, and showing the location and details of ESC and SWPPS measures, is required for all proposed projects. It shall include a ***CSWPP report***, which includes supporting information for providing ESC and SWPPS measures and meeting CSWPP implementation requirements. A copy of the CSWPP plan with CSWPP report shall be kept at the project site throughout all phases of construction. All of the materials required for the CSWPP report are standard parts of engineering plan submittals for projects requiring drainage review. The simplest approach to preparing this report is to compile the pieces during preparation for submittal and include the report as a separate part of the CSWPP plan submittal package. The CSWPP report shall include the following:

1. A detailed **construction sequence**, as proposed by the design engineer or erosion control specialist, identifying required ESC measures and implementation requirements;
2. A **technical information report** (TIR) and ESC and SWPPS plans for CED review in accordance with Sections 2.3.1 and 2.3.3 of the *SWDM*. Incorporate any City review comments as necessary to comply with Core Requirement #5 of the *SWDM* (Section 1.2.5) and the *Construction Stormwater Pollution Prevention Standards* adopted in this appendix;
3. Any **calculations** or information necessary to size ESC measures and demonstrate compliance with Core Requirement #5;
4. Descriptions and any supporting documentation, operating procedures, precautions, logging and reporting requirements, etc., for the project's SWPPS BMPs,
5. An **inspection and maintenance program** in accordance with Section D.2.4.4 that includes the designation of a certified CSWPP supervisor as point of contact; and
6. **Anticipated changes or additions** necessary during construction to ensure that ESC and SWPPS measures perform in accordance with Core Requirement #5 and Sections D.2.1 and D.2.2.

While the CSWPP plan focuses on the initial measures to be applied to the site, any changes or additions necessary during construction to ensure that ESC and SWPPS measures perform in accordance with Core Requirement #5 and Sections D.2.1, D.2.2 and D.2.4 must be identified in the CSWPP report. The City may require large, complex projects to phase construction and submit multiple ESC plans for different stages of construction. Development of new CSWPP plans is not required for changes that are necessary during construction.

D.2.4.2 WET SEASON REQUIREMENTS

Any site with exposed soils during the wet season (October 1 to April 30) shall be subject to the special provisions below. In addition to the ESC cover measures (see Section D.2.1.2), these provisions include

DRAFT

covering any newly seeded areas with mulch and identifying and seeding as much disturbed area as possible prior to September 23 in order to provide grass cover for the wet season. A "wet season ESC plan" must be submitted and approved by the City before work proceeds or continues.

Wet Season Special Provisions

All of the following provisions for wet season construction are detailed in the referenced sections. These requirements are listed here for the convenience of the designer and the reviewer.

1. The allowed time that a disturbed area may remain unworked without cover measures is reduced to two consecutive working days, rather than seven (Section D.2.1.2).
2. Stockpiles and steep cut and fill slopes are to be protected if unworked for more than 12 hours (Section D.2.1.2).
3. Cover materials sufficient to cover all disturbed areas shall be stockpiled on site (Section D.2.1.2).
4. All areas that are to be unworked during the wet season shall be seeded within one week of the beginning of the wet season (Section D.2.1.2.6).
5. Mulch is required to protect all seeded areas (Section D.2.1.2.2).
6. Fifty linear feet of silt fence (and the necessary stakes) per acre of disturbance must be stockpiled on site (Section D.2.1.3.1).
7. Construction road and parking lot stabilization are required for all sites unless the site is underlain by coarse-grained soil (Section D.2.1.4.2).
8. Sediment retention is required unless no offsite discharge is anticipated for the specified design flow (Section D.2.1.5).
9. Surface water controls are required unless no offsite discharge is anticipated for the specified design flow (Section D.2.1.6).
10. Phasing and more conservative BMPs must be evaluated for construction activity near surface waters (Section D.2.4.3).
11. Any runoff generated by dewatering may be required to discharge to the sanitary sewer (with appropriate discharge authorization), portable sand filter systems, or holding tanks (Section D.2.2).

D.2.4.3 CRITICAL AREAS RESTRICTIONS

Any construction that will result in disturbed areas on or within a stream or associated buffer, a wetland or associated buffer, or within 50 feet of a lake shall be subject to the special provisions below. These provisions include, whenever possible, phasing the project so that construction in these areas is limited to the dry season. The City may require more conservative BMPs, including more stringent cover requirements, in order to protect surface water quality. Any project proposing work within 50 feet of a steep slope hazard area shall evaluate the need for diverting runoff that might flow over the top of the slope.

Critical Areas Special Provisions

Any project that disturbs areas on or within a stream or associated buffer, wetland or associated buffer, or within 50 feet of a lake has the potential to seriously damage water resources, even if the project is relatively small. While it is difficult to require specific measures for such projects because the CSWPP plan must be very site specific, the following recommendations shall be incorporated into the plan where appropriate:

1. Whenever possible, phase all or part of the project so that it occurs during the dry season. If this is impossible, November through February shall be avoided since this is the most likely period for large, high-intensity storms.

DRAFT

2. All projects shall be completed and stabilized as quickly as possible. Limiting the size and duration of a project is probably the most effective form of erosion control.
3. Where appropriate, sandbags or an equivalent barrier shall be constructed between the project area and the surface water in order to isolate the construction area from high water that might result due to precipitation.
4. Additional perimeter protection shall be considered to reduce the likelihood of sediment entering the surface waters. Such protection might include multiple silt fences, silt fences with a higher AOS, construction of a berm, or a thick layer of organic mulch upslope of a silt fence.
5. If work is to occur within the ordinary high water mark of a stream, most projects must isolate the work area from the stream by diverting the stream or constructing a cofferdam. Certain small projects that propose only a small amount of grading may not require isolation since diversions typically result in disturbance and the release of some sediment to the stream. For such small projects, the potential impacts from construction with and without a diversion must be weighed.
6. If a stream must be crossed, a temporary bridge shall be considered rather than allowing equipment to utilize the streambed for a crossing.

For projects in or near a salmonid stream, it may be appropriate to monitor the composition of any spawning gravels within a quarter-mile of the site with a McNeil sampler or similar method approved by the City before, during, and after construction. The purpose of such monitoring would be to determine if the fine content of the gravels increases as a result of construction impacts. Monitoring results could be used to guide erosion control efforts during construction and as a threshold for replacing spawning gravels if the fine content rises significantly.

D.2.4.4 MAINTENANCE REQUIREMENTS

All ESC and SWPPS measures shall be maintained and reviewed on a regular basis as prescribed in the maintenance requirements for each BMP and in this section. The CSWPP supervisor shall review the site for ESC and SWPPS at least weekly and within 24 hours of significant storms. The CWSPP supervisor shall also review the site for ESC and SWPPS during periods of active construction where maintenance conditions change with construction activity (e.g., site grading operations, or concrete construction and dewatering operations for a detention vault). The City requires a written record of these reviews be kept on site with copies submitted to CED within 48 hours.

Documentation

If CED requires that a written record be maintained, standard ESC and SWPPS Maintenance Reports forms, included in Section D.4.1, may be used. A copy of all the required maintenance reports shall be kept on site throughout the duration of construction. Detailed maintenance requirements for each ESC measure are provided in Section D.2.1. Maintenance requirements for SWPPS BMPs are specified in Section D.2.2 (as in the case of BMPs related to concrete handling or material containment) or may be specified as part of a treatment or monitoring program, often accompanied with adjustment conditions of approval.

Review Timing

Weekly reviews shall be carried out every 6 to 8 calendar days. Reviews shall also take place within 24 hours of significant storms. In general, a significant storm is one with more than 0.5 inches of rain in 24 hours or less. Other indications that a storm is “significant” are if the sediment ponds or traps are filled with water, or if gullies form as a result of the runoff.

Note: The site is to be in compliance with the regulations of this appendix at all times. The requirement for periodic reviews does not remove the applicant’s responsibility for having the site constantly in compliance with Core Requirement #5 and the requirements of this appendix. The reviews are a mechanism to ensure that all measures are thoroughly checked on a regular basis and that there is

documentation of compliance. The requirement for these reviews does not mean that CSWPP is to be ignored in between.

D.2.4.5 FINAL STABILIZATION

Prior to obtaining final construction approval, the site shall be stabilized, the structural ESC and SWPPS measures (such as silt fences, sediment traps, and concrete waste collection pits) removed, and drainage facilities cleaned. The removal of ESC and SWPPS measures is not required for those projects, such as plats, that will be followed by additional construction under a different permit. In these circumstances, the need for removing or retaining the measures must be evaluated on a site-specific basis.

To obtain final construction approval, the following conditions must be met:

1. All disturbed areas of the site shall be **vegetated or otherwise permanently stabilized**. At a minimum, disturbed areas shall be seeded and mulched (see Section D.2.1.2.6) with a high likelihood that sufficient cover will develop shortly after final approval. Mulch without seeding is not adequate to allow final approval of the permit, except for small areas of mulch used for landscaping. The only exceptions to these requirements are lots within a plat that are to be developed under an approved residential permit immediately following plat approval. In these cases, mulch and/or temporary seeding are adequate for cover.
2. Structural measures such as, but not limited to, silt fences, pipe slope drains, construction entrances, storm drain inlet protection, sediment traps and ponds, concrete washout and collection pits, and pollutant storage shall be removed from the site. Measures that will quickly decompose, such as brush barriers and organic mulches, may be left in place. In the case of silt fences, it may be best to remove fences in conjunction with the seeding, since it may be necessary to bring machinery back in to remove them. This will result in disturbed soils that will again require protection. The CED inspector must approve an applicant's proposal to remove fencing prior to the establishment of vegetation. In some cases, such as residential building following plat development, it shall be appropriate to leave some or all ESC measures for use during subsequent development. This shall be determined on a site-specific basis.
3. All permanent surface water facilities, including catch basins, manholes, pipes, ditches, channels, flow control facilities, and water quality facilities, shall be cleaned. Existing and newly constructed BMPs/facilities shall be cleaned and/or mitigated as necessary to restore functionality. Any offsite catch basin that required protection during construction (see Section D.2.1.5.3) shall also be cleaned.
4. If only the infrastructure of the site has been developed (e.g., subdivisions and short plats) with building construction to occur under a different permit, then the critical area buffers, Critical Area Tracts, or Critical Area Setback Areas shall be clearly marked as described in Section D.2.1.1 in order to alert future buyers and builders.

D.2.4.6 NPDES REQUIREMENTS

As part of NPDES implementation, projects that will disturb one or more acres for purposes of constructing or allowing for construction of a development, or projects disturbing less than one acre that are part of a larger *common plan of development or sale*[13] that will ultimately disturb one or more acres, must apply for coverage under Ecology's Construction Stormwater General Permit. In general, the construction stormwater pollution prevention plan required by the *SWDM* is equivalent to that required by the State. The Ecology stormwater permit application requires the filing of a Notice of Intent (NOI) at

[13] ***Common plan of development or sale*** means a site where multiple separate and distinct construction activities may take place at different times or on different schedules, but still under a single plan. Examples include: 1) phased projects and projects with multiple filings or lots, even if the separate phases or filings/lots will be constructed under separate contract or by separate owners (e.g., a development where lots are sold to separate builders); 2) a development plan that may be phased over multiple years, but is still under a consistent plan for long-term development; and 3) projects in a contiguous area that may be unrelated but still under the same contract, such as construction of a building extension and a new parking lot at the same facility.

DRAFT

least 30 days prior to the start of construction. The only major requirement of the stormwater permit that is not included in the *SWDM* is a public notice requirement. Note that this public notice for Ecology's stormwater permit may be published concurrently with other public notices required for permits or SEPA. Contact Ecology at (360) 407-7156 for complete information on permit thresholds, applications, and requirements.

D.2.4.7 FOREST PRACTICE PERMIT REQUIREMENTS

Projects that will clear more than two acres of forest or 5,000 board feet of timber must apply for a Class IV Special Forest Practice permit from the Washington State Department of Natural Resources (WSDNR). All such clearing is also subject to the State Environmental Policy Act (RCW 43.21C) and will require SEPA review. The City assumes lead agency status for Class IV permits and the application may be consolidated with the associated City development permit or approval. The permit must be initiated with WSDNR, but will then be transferred over to the City to conduct the SEPA review and grant the permit. Contact the WSDNR for complete information on permit thresholds, applications, and requirements.

D.2.5 CONSTRUCTION STORMWATER POLLUTION PREVENTION PLANS

This section details the specifications and contents for CSWPP plans, containing ESC plans and SWPPS plans. A CSWPP plan includes the plan's drawings plus a CSWPP report, which provides all supporting information and any additional direction necessary for implementing ESC and SWPPS measures and meeting CSWPP implementation requirements. The CSWPP plan must be submitted to CED as part of a complete engineering plan to facilitate proper drainage review. A copy of the approved CSWPP plan (with CSWPP report) must be kept on the project site (see Section D.2.4.1) at all times during the construction phase.

D.2.5.1 ESC PLAN

ESC Plan General Specifications

The **site improvement plan** shall be used as the base of the ESC plan. Certain detailed information (e.g., pipe catch basin size, stub-out locations, etc.) that is not relevant may be omitted to make the ESC plan easier to comprehend. At a minimum, the ESC plan shall include all of the information required for the **base map of a site improvement plan** (see Table 2.3.1A of the *SWDM*), as well as existing and proposed roads, driveways, parking areas, buildings and drainage facilities (including existing and proposed BMPs/facilities), utility corridors not associated with roadways, *relevant critical areas*[14] and associated buffers, and proposed final topography. A smaller scale may be used to provide better comprehension and understanding.

The ESC plan shall generally be designed for proposed topography, not existing topography, since rough grading is usually the first step in site disturbance. The ESC plan shall **address all phases of construction** (e.g., clearing, grading, installation of utilities, surfacing, and final stabilization). The City may require large, complex projects to phase construction and submit multiple ESC plans for different stages of construction.

The ESC plan outlines the minimum requirements for anticipated site conditions. During construction, **ESC plans shall be revised as necessary** by the CSWPP supervisor or as directed by the City to address changing site conditions, unexpected storm events, or non-compliance with the ESC performance criteria in Section D.2.3.3. If non-compliance with the ESC performance criteria occurs, the plan must be updated within 7 days of inspections or investigations. Implementation of the onsite changes must occur within 10 days.

[14] *Relevant critical areas*, for the purposes of drainage review, include aquatic areas, wetlands, flood hazard areas, erosion hazard areas, landslide hazard areas, steep slope hazard areas, and critical aquifer recharge areas.

DRAFT

The following list provides the basic information requirements for the ESC plan and its supporting documentation. This information shall be consistent with that in Section 8 of the plan's technical information report (TIR) required in the engineering plan submittal (see Section 2.3.1 of the *SWDM*). Note that the ESC plan's drawings may be simplified by the use of the symbols and codes provided for each ESC measure in Section D.2.1. In general, the ESC plan's drawings shall be submitted as a separate plan sheet(s). However, there may be some relatively simple projects where providing a separate grading and ESC plan drawing is unnecessary.

1. Identify areas with a high **susceptibility to erosion**.
2. Provide all details necessary to clearly illustrate the **intent of the ESC design**.
3. Include ESC measures for all on- and offsite **utility construction** included in the permit.
4. Specify the **construction sequence**. The construction sequence shall be specifically written for the proposed project. An example construction sequence is provided in Reference Section 7-B.
5. Include **standard ESC plan notes.** Standard ESC and SWPPS Notes are provided in Reference Section 7-B.
6. Include an **inspection and maintenance program** for ESC measures, including designation of a certified ESC supervisor and identification of phone numbers for 24-hour contact.
7. Include the **basis and calculations** for selection and sizing of ESC measures.
8. Include documentation, conditions of approval and discussion of approvals from other agencies for alternative treatment and/or disposal methods.

ESC Plan Measure-Specific Information

The ESC plan must include the following information specific to applicable ESC measures and implementation requirements. As noted above, this information may need to be updated or revised during the life of the project by the CSWPP supervisor or as directed by the City.

Clearing Limits

1. **Delineate** clearing limits (areas to remain uncleared) and on-site BMP area protection limits.
2. Provide **details** sufficient for installation of markings for maintenance of clearing limits and protection limits.

Cover Measures

1. Specify the type and location of **temporary cover measures** to be used on site.
2. If **more than one type of cover measure** is to be used on site, indicate the areas where the different measures shall be used, including steep cut and fill slopes.
3. If the type of cover measures to be used will vary depending on the time of year, soil type, gradient, or some other factor, **specify the conditions that control the use of the different measures**.
4. Specify the nature and location of **permanent cover measures**. If a landscaping plan is prepared, this may not be necessary.
5. Specify the approximate amount of cover measures necessary to cover all disturbed areas.
6. If **netting, blankets, or plastic sheeting** are specified, provide typical details sufficient for installation and maintenance.
7. Specify the **mulch types, seed mixes, fertilizers, and soil amendments** to be used, as well as the application rate for each item. (Also include fertilizer and application rate information in the SWPPS documents)
8. For **surface roughening**, describe methods, equipment and areas where surface roughening will be use.

DRAFT

9. If **PAM** is used on a site, show location(s) and describe application method.
10. When **compost blankets** are used, show site location, application rates, and the name of the supplier to document that compost meets quality specifications per *SWDM* Reference Section 11-C.

Perimeter Protection

1. Specify the **location and type** of perimeter protection to be used.
2. Provide **typical details** sufficient for installation and maintenance of perimeter protection.
3. If a **silt fence** is to be used, specify the type of fabric.
4. If **compost berms or socks** are used, documentation must be provide to ensure the supplier meets quality specifications per *SWDM* Reference Section 11-C.

Traffic Area Stabilization

1. Locate the construction entrance(s).
2. Provide typical details sufficient for installation and maintenance of the construction entrance.
3. Locate the construction roads and parking areas.
4. Specify the measure(s) that will be used to create stabilized construction roads and parking areas. Provide sufficient detail to install and maintain.
5. If a wheel wash or tire bath system will be installed, provide location, typical details for installation and maintenance.
6. Provide a list of dust control products that will be used onsite and the location of potential application areas.

Sediment Retention

1. Show the **locations** of all sedimentation ponds and traps.
2. Dimension pond **berm widths** and all inside and outside pond slopes.
3. Indicate the **trap/pond storage** required and the depth, length, and width dimensions.
4. Provide typical **section views** throughout the pond and outlet structure.
5. If **chemical or electrocoagulation treatment** of sediment-laden waters will be used, approval documentation from Ecology must be included.
6. Provide details for **disposal of contaminated or chemically treated waters** (e.g., where Chitosan or CO_2 have been used).
7. Include here and in the SWPPS plan appropriate **approval documentation from King County and the City of Renton** if contaminated or chemically treated water will be discharged to the sanitary sewer.
8. Provide typical details of the **control structure** and **dewatering mechanism**.
9. Detail **stabilization techniques** for the outlet/inlet protection.
10. Provide details sufficient to install **cell dividers**.
11. Specify mulch and/or recommended **cover of berms and slopes**.
12. Indicate the **required depth gage** with a prominent mark at 1-foot depth for sediment removal.
13. Indicate **catch basins** that are to be protected.
14. Indicate **existing and proposed BMP/facility areas** that are to be protected.
15. Provide **details of the catch basin and BMP/facility protection** sufficient to install and maintain.

DRAFT

Surface Water Control

1. **Locate** all pipes, ditches, and interceptor ditches, dikes, and swales that will be used to convey stormwater.
2. Provide **details** sufficient to install and maintain all **conveyances**.
3. Indicate locations of **outlet protection** and provide detail of protections.
4. Indicate locations and outlets of any possible **dewatering systems**. Provide details of alternative discharge methods from dewatering systems if adequate infiltration rates cannot be achieved. Alternative dewatering systems may also require documentation per the SWPPS plan.
5. Indicate the location of any **level spreaders** and provide details sufficient to install and maintain.
6. Provide all **temporary pipe inverts**.
7. Provide location and specifications for the **interception of runoff from disturbed areas** and the conveyance of the runoff to a non-erosive discharge point.
8. Provide **locations** of **rock check dams**.
9. Provide **details**, including front and side sections, of typical **rock check dams**.

Wet Season Requirements

1. Provide a **list** of all applicable wet season requirements.
2. Clearly identify that from October 1 through April 30, no soils shall be exposed for more than two consecutive working days. Also note that this **two-day requirement** may be applied at other times of the year if storm events warrant more conservative measures.
3. Clearly identify that **exposed soils shall be stabilized** at the end of the workday prior to a weekend, holiday, or predicted rain event.

Critical Areas Restrictions

1. **Delineate and label the following critical areas**, and any applicable buffers, that are on or adjacent to the project site: aquatic areas, wetlands, flood hazard areas, erosion hazard areas, landslide hazard areas, steep slope hazard areas, and critical aquifer recharge areas.
2. If construction creates disturbed areas within any of the above listed critical areas or associated buffers, specify the type, locations, and details of any **measures or other provisions necessary to comply with the critical area restrictions** in this appendix and protect surface waters and steep slopes.

D.2.5.2 SWPPS PLAN

SWPPS Plan General Specifications

The **SWPPS plan**, together with the ESC plan, comprise the CSWPP that must be submitted as part of the engineering plans required for drainage review.

The SWPPS plan shall **address all phases of construction** (e.g., clearing, grading, installation of utilities, surfacing, and final stabilization). The City may require large, complex projects to phase construction and submit multiple SWPPS plans for different stages of construction.

The SWPPS plan outlines the minimum requirements for anticipated site conditions and construction activity. During construction, **SWPPS plan shall be revised as necessary** by the CSWPP supervisor or as directed by the City to address changing site conditions or construction activity, unexpected storm events, or non-compliance with the SWPPS performance criteria in Section D.2.3.4. If non-compliance with the SWPPS performance criteria occurs (e.g., a pollutant spill), immediate action may be necessary to address the occurrence; otherwise, the plan must be updated within 7 days of inspections or investigations. Implementation of the onsite changes must occur within 10 days.

DRAFT

The SWPPS plan must be kept on ***site*** during all phases of construction and shall **address the construction-related pollution-generating activities outlined in Subsection A below**. The plan must include a description of the methods the general contractor will use to ensure sub-contractors are aware of the SWPPS plan. A **form or record** must be provided that states all sub-contractors have read and agree to the SWPPS plan.

A SWPPS plan consists of the following three elements, which are further described in Subsections B, C, and D below:

1. A **site plan** with supporting documentation, showing the location and description of BMPs required to prevent pollution and control spills from construction activities and from chemicals and other materials used and stored on the construction site. **Supporting documentation** (see the TIR Section 8 discussion in Section 2.3.1.1 of the *SWDM*) shall include:

   - All details necessary to clearly illustrate the intent of the SWPPS design;
   - The basis, supporting documentation and approvals, and any calculations for selection and sizing of SWPPS measures; and
   - An inspection and maintenance program for SWPPS measures, including designation of a certified ESC professional and CSWPP supervisor and identification of phone numbers for 24-hour contact.
   - Documentation, conditions of approval and discussion of approvals from other agencies for treatment and/or disposal methods (e.g., discharge to sanitary sewer, Ecology-approved chemical treatments).
   - The SWPPS plan shall also **discuss the receiving waters**, especially if the receiving water body is listed on the **303d list**. Information must be provided that shows the plan meets **TMDL requirements**. Discuss the 303(d) listed pollutant generated or used onsite and any special handling requirements or BMPs.

   See Subsection B below for more specifics on the SWPPS site plan.

2. A **pollution prevention report** listing the potential sources of pollution and identifying the operational, source control, and treatment BMPs necessary to prevent/mitigate pollution from these sources. See Subsection C below for more specifics on the SWPPS pollution prevention report.

3. A **spill prevention and cleanup report** describing the procedures and BMPs for spill prevention and including provisions for cleanup of spills should they occur. See Subsection D below for more specifics on the SWPPS spill prevention and cleanup report.

A. ACTIVITY-SPECIFIC INFORMATION REQUIRED

At a minimum, the SWPPS plan shall address, if applicable, the following pollution-generating activities typically associated with construction and include the information specified below for each activity. If other pollution-generating activities associated with construction of the proposed project are identified, the SWPPS plan must address those activities in a similar manner.

Storage and Handling of Liquids

1. Identify liquids that will be handled or stored onsite, including but not limited to petroleum products, fuel, solvents, detergents, paint, pesticides, concrete admixtures, and form oils.

2. Specify types and sizes of containers of liquids that will be stored/handled onsite. Show locations on the SWPPS site plan.

3. Describe secondary containment methods adequately sized to provide containment for all liquids stored onsite. Show the locations of containment areas on the SWPPS site plan.

Storage and Stockpiling of Construction Materials and Wastes

1. **Identify** construction materials and wastes that may be generated or stockpiled onsite. Show the **locations** where these materials and wastes will be generated and stockpiled on the SWPPS site plan.

2. Specify type of **cover measures** to be used to keep rainwater from contacting construction materials and wastes that can contribute pollutants to storm, surface, and ground water.
3. If wastes are kept in **containers**, describe how rainwater will be kept out of the containers.

Fueling

1. Specify **method of onsite fueling** for construction equipment (i.e., stationary tanks, truck mounted tanks, wet hosing, etc.). If stationary tanks will be used, show their location on the SWPPS site plan.
2. Describe **type and size of tanks**.
3. Describe **containment methods for fuel spills** and make reference to the SWPPS site plan for location information.
4. If fueling occurs **during evening hours**, describe lighting and signage plan. Make reference to the SWPPS site plan for location information.

Maintenance, Repairs, and Storage of Vehicles and Equipment

1. Identify **maintenance and repair areas** and show their locations on the SWPPS site plan. Use of drip pans or plastic beneath vehicles is required. A note to this effect must be shown on the SWPPS site plan.
2. Describe method for collection, storage, and disposal of **vehicle fluids**.
3. If an area is designated for vehicle maintenance, **signs must be posted** that state no vehicle washing may occur in the area. A note to this effect must be shown on the SWPPS site plan.

Concrete Saw Cutting, Slurry, and Washwater Disposal

1. Identify **truck washout areas** to ensure such areas are not within an ***Aquifer Protection Area***. If they are, the washout area must be lined with an impervious membrane. Show location information on the SWPPS site plan.
2. Specify **size of sumps** needed to collect and contain slurry and washwater. Show location information on the SWPPS site plan.
3. Identify **areas for rinsing hand tools** including but not limited to screeds, shovels, rakes, floats and trowels. Show the locations of these areas on the SWPPS site plan.
4. Describe **methods for collecting, treating, and disposal** of waste water from exposed aggregate processes, concrete grinding and saw cutting, and new concrete washing and curing water. Do not use upland land applications for discharging wastewater from concrete washout areas.

Handling of pH Elevated Water

New concrete vaults/structures may cause collected water to have an elevated pH. This water cannot be discharged to storm or surface water until neutralized.

1. Provide details on **treating/neutralizing water** when pH is not within neutral parameters.
2. Provide details on **disposal of water** with elevated pH or of the treated water.
3. If **approvals from other agencies for treatment and/or disposal methods** (e.g., discharge to sanitary sewer, Ecology-approved chemical treatments) have been obtained, indicate such approvals on the plan.

Application of Chemicals Including Pesticides and Fertilizers

1. Provide a **list of chemicals** that may be used on the ***project site*** and the application rates.
2. Describe **where and how chemicals will be applied**. Show location information on the SWPPS site plan.
3. Describe **where and how chemicals will be stored**. Show location information on the SWPPS site plan.

DRAFT

B. SWPPS SITE PLAN

The ***site*** plan element of the SWPPS plan shall include all of the information required for the base map (see *SWDM* Table 2.3.1.A), as well as existing and proposed roads, driveways, parking areas, buildings, drainage facilities, utility corridors not associated with roadways, *relevant critical areas*[15] and associated buffers, and proposed final topography. A smaller scale may be used to provide more comprehensive details on specific locations of each activity and specific prevention measure. In addition to this information, the following items, at a minimum, shall be provided as applicable:

1. Include SWPPS measures for all on- and offsite **utility and roadway construction** included in the permit.
2. Specify the **construction sequence**. The construction sequence shall be specifically written for the proposed project. An example construction sequence is provided in Reference Section 7-B.
3. Append to the **standard ESC plan notes any site specific SWPPS notes** (see ESC Plans General Specifications above) and specify the construction sequence, including offsite roadway/utility construction and periods of concentrated construction of concrete structures (e.g., detention vaults). Standard ESC and SWPPS Notes are provided in the Reference Section 7-B.
4. Identify locations where **liquids will be stored** and delineate secondary containment areas that will be provided. (*Secondary containment* means placing tanks or containers within an impervious structure capable of containing 110% of the volume contained in the largest tank within the containment structure. Double-walled tanks do not require additional secondary containment.)
5. Identify locations where **construction materials and wastes** will be generated and stockpiled.
6. Identify location of **fueling for vehicles and equipment** if stationary tanks will be used.
7. Delineate **containment areas** for fuel spills.
8. Show location of **lighting and signage** for fueling during evening hours.
9. Delineate **maintenance and repair areas** and clearly note that drip pans or plastic shall be used beneath vehicles. Also, clearly note that signs must be posted that state no **vehicle washing** may occur in the area.
10. Delineate **truck washout areas** and identify the location of **slurry/washwater sumps and rinsing areas** for tools. To ensure the wheel wash/tire bath from the ESC plan and the concrete washout areas are at separate locations, show the location of the wheel wash or tire bath per the ESC plan. (ESC wheel wash or tire bath wastewater shall not include wastewater from concrete washout areas.)
11. Delineate where **chemicals** will be applied and identify where they will be stored.
12. Identify where **spill response materials** will be stored.
13. Indicate whether written approval from Ecology has been obtained for the use of chemical treatment other than CO_2 or dry ice to adjust pH, and provide necessary details and conditions.

C. POLLUTION PREVENTION REPORT

This report provides the specifics on pollution prevention and must include the following information in addition to the activity-specific information specified in Subsection A above:

1. List the possible **sources of pollution** per Subsection A above and identify the BMPs to be used for each source to prevent pollution. Include any **supporting information** (site conditions, calculations, etc.) for the selection and sizing of pollution prevention BMPs.

[15] *Relevant critical areas*, for the purposes of drainage review, include aquatic areas, wetlands, ***flood hazard areas***, ***erosion hazard areas***, ***landslide hazard drainage areas***, and ***steep slope hazard areas***.

2. Identify the **personnel** responsible for pollution prevention and clearly list the responsibilities of each person identified. **Contact information** for these personnel must be clearly identified in the report and on the SWPPS site plan.
3. Describe the **procedures** to be used for monitoring pollution prevention BMPs and for responding to a BMP that needs attention, including keeping records/reports of all inspections of pollution prevent BMPs (see Reference Section 4.3 in this appendix) for examples of worksheets that may be used).

D. SPILL PREVENTION AND CLEANUP REPORT

This report provides the specifics on spill prevention and cleanup and must include the following information in addition to any activity-specific information in Subsection A above related to spill prevention:

1. List the possible **sources of a spill** and identify the BMPs to be used for each source to prevent a spill.
2. Identify **personnel** responsible for spill prevention and cleanup and clearly list the responsibilities of each person identified. **Contact information** for these personnel must be clearly identified in the report and on the SWPPS site plan.
3. Describe the **procedures** to be used for monitoring spill prevention BMPs and for responding to a spill incident, including keeping records/reports of all inspections and spills (see Reference Section 4.3 in this appendix for examples of worksheets that may be used).
4. Identify where **spill response materials** will be stored. Make reference to the SWPPS site plan for location information.
5. Identify **disposal methods** for contaminated water and soil after a spill.

DRAFT

(This page intentionally left blank.)

DRAFT

D.3 SMALL SITE CSWPP

Smaller project sites have similar ESC and SWPPS needs. This section offers a simplified set of requirements for applying erosion and sediment and pollutant/spill controls to certain smaller project sites and guides the user through the preparation and submittal of a Small Site CSWPP Plan with the permit application.

D.3.1 INTRODUCTION TO SMALL SITE CSWPP

What is CSWPP, ESC and SWPPS, and Why is it Required for My Site?

ESC – for erosion and sediment control and *SWPPS* – for stormwater pollution prevention and spill control are two strategies comprising the *Construction Stormwater Pollution Prevention (CSWPP)* plan requirement on construction sites in the City.

The basic erosion and sediment control requirement—that sediment transport and other construction related pollutants shall be prevented to the maximum extent practicable from leaving the site—**applies to all projects in the City of Renton**. All projects, including those with small project sites, are required to use ESC measures. ESC measures prevent soil erosion during development of the site. The types of measures required for small sites are generally simple to construct and easy to maintain, and with few exceptions do not require engineering or formal design. Examples of such measures include silt fences, phasing or minimizing clearing, routing water around exposed soils, and placing straw or other mulching materials and cover exposed soils.

ESC is required because soils eroded from the site are *always* deposited downstream in pipes, streams, or lakes. Soils deposited in a pipe or channel reduce its capacity to convey flows and can increase the likelihood of flooding. Soils deposited in BMPs/facilities can significantly reduce their infiltrative capacity. Soils deposited in streams can clog the gravels that salmon use for spawning. Nutrients associated with soils that reach lakes can upset the chemical balance of the lake, causing excessive growth of algae and decreasing recreational uses such as swimming, boating, and fishing.

While the majority of small sites will have less need for the type and extent of construction activity found on large projects, some activities and the materials used are common to all site construction. SWPPS measures are required to ensure effective planning and implementation of proper handling, spill prevention and cleanup for equipment fuels and petroleum products, paints and solvents, high pH wastewater from concrete construction operations and other pollutants common on small sites. Measures on small sites are usually straightforward and easily implemented

Which Projects May Use Small Site Construction Stormwater Pollution Prevention Requirements?

All projects that do any amount of land disturbing activity are subject to the ESC standards in this appendix per RMC 4-4-060 regardless of whether a permit is required or drainage review under the *SWDM* is triggered. Any such project that is not subject to drainage review under the *SWDM* and that disturbs soil on less than 1 acre of land may use the Small Site CSWPP requirements contained in this section. In addition, these projects must apply erosion and sediment control in accordance with RMC 4-4-060.

Any proposed project subject to Simplified Drainage Review as determined in Section 1.1.2.1 of the *SWDM*, and which disturbs soil on less than 1 acre of land, may use the Small Site CSWPP requirements contained in this section. These same requirements are contained in Appendix C of the *SWDM*, which details the drainage requirements for small agricultural and single family residential building or subdivision projects subject to Simplified Drainage Review.

DRAFT

What Will I Be Required To Do?

It is the responsibility of both the applicant and the contractor to minimize erosion and the transport of sediment and pollutants to the greatest extent possible. You and/or your contractor will be required to evaluate each of the small site ESC and SWPPS requirements specified in Section D.3.2 below for applicability to your project site. This evaluation and the proposed ESC and SWPPS measures to be used to meet these requirements will need to be documented in a Small Site CSWPP Plan that must be submitted to CED for approval prior to commencing land disturbing activities. See the submittal requirements in Section D.3.6.

D.3.2 SMALL SITE CSWPP REQUIREMENTS

For projects that disturb less than 1 acre of land, all of the following small site ESC and SWPPS requirements must be evaluated for applicability to the proposed project:

A. MARK CLEARING LIMITS/MINIMIZE CLEARING

Prior to beginning land disturbing activities, all clearing limits, sensitive areas and their buffers, trees that are to be preserved within the construction area and any existing or proposed on-site BMP areas shall be clearly marked, both in the field and on the small site CSWPP plan, to prevent damage and offsite impacts. Also, clearing shall be minimized to the maximum extent practicable. See "**Mark Clearing Limits/Minimize Clearing**," Section D.3.4.1, for more detailed specifications.

B. MINIMIZE SEDIMENT TRACKED OFFSITE

1. Establish a stabilized entrance for construction vehicle access to minimize the tracking of sediment onto public roads. Entrance and exit shall be limited to one route, if possible. See "**Stabilized Construction Entrance**," Section D.2.1.4.1, for detailed specifications.
2. If sediment is tracked offsite, public roads shall be cleaned thoroughly at the end of each day, or more frequently during wet weather, if necessary to prevent sediment from entering waters of the state. Sediment shall be removed from roads by shoveling or pickup sweeping and shall be transported to a controlled sediment disposal area. Street washing will be allowed only after sediment is removed in this manner. Street wash wastewater shall be controlled by pumping back onsite, or otherwise be prevented from discharging into drainage systems tributary to surface waters. This requirement **shall be included as a note** on the small site CSWPP plan.

C. CONTROL SEDIMENT

Runoff from disturbed areas must pass through a sediment control measure to prevent the transport of sediment downstream until the disturbed area is fully stabilized. Sediment controls must be installed as one of the first steps in grading and shall be functional before other land disturbing activities take place. One or more the following sediment controls may be used to meet this requirement:

- **Silt Fence** (See Section D.2.1.3.1)
- **Vegetated Strip** (See Section D.2.1.3.3)
- **Triangular Silt Dike** (See Section D.2.1.3.4)
- **Storm Drain Inlet Protection** (See Section D.2.1.5.3)

D. STABILIZE EXPOSED SOILS

All exposed and unworked soils shall be stabilized through the application of **cover measures** to protect the soil from the erosive forces of raindrop impact, flowing water, and wind erosion. One or more of the following **cover measures** may be used to meet this requirement during the construction phase:

- **Mulching** (See Section D.2.1.2.2)
- **Plastic Covering** (See Section D.2.1.2.4)
- **Nets and Blankets** (See Section D.2.1.2.3)

- **Seeding** (See Section D.2.1.2.6)
- **Sodding** (See Section D.2.1.2.7)

Cover measures shall be applied in accordance with the following requirements:

1. Cover measures must be installed if an area is to remain unworked for more than seven days during the dry season (May 1 to September 30) or for more than two consecutive working days during the wet season (October 1 to April 30). These time limits may be relaxed if an area poses a low risk of erosion due to soil type, slope gradient, anticipated weather conditions, or other factors. Conversely, the City may reduce these time limits if site conditions warrant greater protection (e.g., adjacent to significant aquatic resources or highly erosive soils) or if significant precipitation is expected.
2. Any area to remain unworked for more than 30 days shall be seeded or sodded unless the City determines that winter weather makes vegetation establishment infeasible. During the wet season, exposed ground slopes and stockpile slopes with an incline of 3 horizontal to 1 vertical (3H:1V) or steeper and with more than ten feet of vertical relief shall be covered if they are to remain unworked for more than 12 hours. Also during the wet season, the material necessary to cover all disturbed areas must be stockpiled on site. The intent of these cover requirements is to have as much area as possible covered during any period of precipitation.

E. CONTROL RUNOFF

Stormwater runoff originating on the ***site*** and/or entering the ***site*** from offsite areas must be controlled so as to minimize erosion of disturbed areas and exposed cut and fill slopes, and to minimize erosive impacts on existing or proposed on-site BMP areas. The following runoff control measures shall be used as needed per the conditions of use and specifications for each measure:

- **Interceptor Dikes and Swales** (see Section D.2.1.6.1 for conditions of use and specifications)
- **Ditches** (see Section D.3.4.2 for conditions of use and specifications)
- **Pipe Slope Drain** (see Section D.3.4.3 for conditions of use and specifications)

F. CONTROL DEWATERING

Accumulated water in foundation areas, excavations, and utility trenches shall be removed and disposed of in a manner that does not pollute surface waters or cause downstream erosion or flooding. See "**Dewatering Control**," Section D.2.1.7, for detailed specifications.

G. CONTROL OTHER POLLUTANTS (SWPPS)

All construction activities shall be done in a manner that prevents pollution of surface waters and ground waters as specified in this appendix and King County's *Stormwater Pollution Prevention Manual (SPPM)*. See "**Control of Other Pollutants (SWPPS)**" (Section D.3.5) for specific measures and references to applicable activity sheets in the *SPPM*. References to SWPPS BMPs from this appendix and applicable activity sheets in *SPPM* shall be included in the small site CSWPP plan.

H. FINAL STABILIZATION

1. Prior to final construction approval, the ***project site*** shall be stabilized to prevent sediment-laden water from leaving the ***project site*** after project completion. All disturbed areas of the ***project site*** shall be vegetated or otherwise permanently stabilized. At a minimum, disturbed areas must be seeded and mulched to ensure that sufficient cover will develop shortly after final approval. Mulch without seeding is adequate for small areas to be landscaped before October 1.
2. All temporary ESC and SWPPS measures shall be removed within 30 days after final site stabilization is achieved or after the temporary measures are no longer needed. Trapped sediment shall be removed or stabilized onsite. On-site BMPs impacted during construction shall be restored. Disturbed soil areas resulting from removal of measures or vegetation shall be permanently stabilized with seeding or sodding.

DRAFT

D.3.3 SMALL SITE CSWPP IMPLEMENTATION REQUIREMENTS

Projects that disturb less than 1 acre of land must implement the CSWPP measures determined necessary in Section D.3.2 in accordance with the following requirements:

1. The placement and type of proposed ESC and SWPPS measures are to be shown on a **Small Site CSWPP plan**. This plan must be in accordance with the specifications for such plans outlined in Section D.3.6 unless otherwise directed by CED.
2. If CED finds that implementation of the proposed **Small Site CSWPP plan is insufficient** to prevent the discharge of sediment or other pollutants to the maximum extent practicable, additional measures will be required by CED. In some cases, an ESC plan or a complete Construction Stormwater Pollution Plan prepared by a ***civil engineer*** per Chapter 2 of the *SWDM* may be required.
3. The contractor or other persons performing construction activities shall comply with the **stormwater pollution prevention and spill control measures/BMPs** specified for such activities in Section D.3.5 and/or the King County *SPPM*. A note to this effect must be put on the approved Small Site CSWPP plan.
4. Prior to commencing construction, the applicant must identify to the City a **contact person** responsible for overseeing the installation and maintenance of required ESC and SWPPS measures and compliance with this appendix and the *SPPM* during construction. The name and contact information for this person must be on or attached to Small Site CSWPP plan at the time of construction.
5. Both the **applicant and contractor are responsible** for implementation and maintenance of the approved CSWPP plan and any additional measures required by the City.
6. The **Small Site CSWPP plan shall be retained onsite** or within reasonable access to the site. The plan shall be modified whenever there is a significant change in the design, construction, operation, or maintenance at the construction site that has, or could have, a significant effect on the discharge of pollutants to surface waters. The plan shall be modified, if during inspections or investigations conducted by the City, it is determined that the plan is ineffective in eliminating or significantly minimizing pollutants in stormwater discharges from the site. The plan shall be modified as necessary to include additional or modified measures designed to correct problems identified.

D.3.4 ESC MEASURES MODIFIED FOR SMALL SITES

ESC for Small Sites. This section presents **supplementary or modified ESC measure**s for use on small sites (i.e., construction sites of projects disturbing less than 1 acre of land). General ESC measures can be found in Section D.2.1.

D.3.4.1 MARK CLEARING LIMITS/MINIMIZE CLEARING

Purpose

Minimizing clearing is the most effective method of erosion control. Undisturbed vegetation intercepts and slows rainwater. Plant roots hold soil in place, and dead vegetation on the ground acts as a mulch. Marking clearing limits around existing or proposed on-site BMP areas helps protect their infiltrative soil characteristics from construction activity.

Applications

Clearing limits shall be marked and clearing minimized on any ***site*** where significant areas of undisturbed vegetation will be retained, or where existing or proposed BMP/facility areas require protection from construction activities.

DRAFT

Design Specifications

1. Minimizing clearing should be incorporated into the ***site*** design. Clearing limits must be marked on the small site ESC plan.
2. On the ground, clearing limits must be clearly marked with brightly colored tape or plastic or metal safety fencing. If tape is used, it should be supported by vegetation or stakes, and should be about 3 to 6 feet high and highly visible. BMP/facility areas to be protected should be marked with brightly colored silt fence to add sedimentation protection. Equipment operators should be informed of areas of vegetation that are to be left undisturbed and BMP/facility areas that are to be protected.
3. The duff layer, native top soil, and natural vegetation shall be retained in an undisturbed state to the maximum extent practicable. If it is not practicable to retain the duff layer in place, it should be stockpiled onsite, covered to prevent erosion, and replaced immediately upon completion of the ground disturbing activities.

Maintenance

Fencing shall be inspected regularly and repaired or replaced as needed.

D.3.4.2 DITCHES

Purpose

Ditches intercept and convey runoff from disturbed areas to sediment control locations. They also convey runoff intercepted from undisturbed areas around the construction site to a non-erosive discharge point.

Conditions of Use

Ditches may be used anywhere that concentrated runoff is to be conveyed on or around the construction site. Temporary pipe systems may also be used to convey runoff.

Design and Installation Specifications

1. Up to 30,000 square feet may be drained by a 12-inch deep trapezoidal ditch with a 1-foot bottom width. Up to 2 acres may be drained by an 18-inch deep trapezoidal ditch with a 1-foot bottom width. Ditches draining larger areas will need to be sized by a ***civil engineer***.
2. Ditch side slopes shall be no steeper than 2H:1V.
3. Ditches on 5% or steeper grades shall be armored with rip rap or contain crushed rock check dams spaced such that the crest of each dam is even with the toe of the next upstream dam. See Figure D.2.1.6.E for details on check dam installation.

Maintenance Standards

1. Any sediment deposition of more than 0.5 feet shall be removed so that the channel is restored to its design capacity.
2. If the channel capacity is insufficient for the design flow, it must be determined whether the problem is local (e.g., a constriction or bend) or the channel is under-designed. If the problem is local, the channel capacity must be increased through construction of a berm(s) or by excavation. If the problem is under-design, the design engineer shall be notified and the channel redesigned to a more conservative standard to be approved by the City.
3. The channel shall be examined for signs of scouring and erosion of the bed and banks. If scouring or erosion has occurred, affected areas shall be protected by riprap or an erosion control blanket or net.

DRAFT

D.3.4.3 PIPE SLOPE DRAIN

Purpose

Pipe slope drains are designed to carry concentrated runoff down steep slopes without causing erosion, or saturation of slide-prone soils. Pipe slope drains may be used to divert water away from or over bare soil to prevent gullies, channel erosion, and saturation of slide prone soils

Conditions of Use

Pipe slope drains should be used when a temporary or permanent stormwater conveyance is needed to move water down a steep slope to avoid erosion. Pipe slope drains may be:

1. Used on any slope with a gradient of 2H:1V or greater and with at least 10 feet of vertical relief.
2. Used to drain water collected from aquifers exposed on cut slopes and convey it to the base of the slope.
3. Used to collect clean runoff from plastic sheet cover and direct away from any exposed soils.
4. Installed in conjunction with silt fence to drain collected water to a controlled area.

Design and Installation Specifications

1. See Figure D.2.1.6.D for details.
2. Up to 30,000 square feet may be drained by each 6-inch minimum diameter pipe. Up to 2 acres may be drained by each 12-inch minimum diameter pipe.
3. The **maximum drainage area** allowed for any 12-inch pipe is 2 acres. For larger areas, more than one pipe shall be used.
4. The **soil** around and under the pipe and entrance section shall be thoroughly compacted.
5. The **flared inlet section** shall be securely connected to the slope drain and be fused or welded, or have flange-bolted mechanical joints to ensure a watertight seal. Ensure that the entrance area is stable and large enough to direct flow into the pipe.
6. Slope drains shall be continuously fused, welded, or flange-bolted mechanical joint pipe systems with proper anchoring to the soil.
7. Re-establish cover immediately on areas disturbed by the installation.

Maintenance Standards

1. The inlet shall not be undercut or bypassed by water. If there are problems, the head wall shall be appropriately reinforced.
2. No erosion shall occur at the outlet point. If erosion occurs, additional protection shall be added.

D.3.5 CONTROL OF OTHER POLLUTANTS (SWPPS)

SWPPS for Small Sites. SWPPS measures **are not modified** for small sites; however, the scope and complexity may be lessened in accordance with the scope of the small site project. Construction activity shall not allow pollutant discharge to surface waters or water resources. The measures listed below provide summary guidance on typical issues and associated BMPs. See Section D.2.2 for additional SWPPS information and measures.

Purpose

To prevent the discharge of pollutants resulting from construction activities. The Small Site CSWPP plan is not complete if this section is not included in the planning and implementation of CSWPP for the Small Site project.

DRAFT

Application

Pollution control measures shall be used whenever there is a potential for the discharge to ground or surface water of any pollutants used on the site.

Pollution Control Measures

The following pollution control measures shall be implemented as applicable using activity-specific BMPs detailed in Section D.2.2 (and Section D.2.1 as applicable) of this appendix and the King County *SPPM (listed Activity Sheets are viewable at <http://www.kingcounty.gov/environment/water-and-land/stormwater/documents/pollution-prevention-manual.aspx>)*:

1. All pollutants, including waste materials, that occur onsite shall be handled and disposed of in a manner that does not cause contamination of stormwater. See BMPs D.2.2.1 "Concrete Handling" on and D.2.2.4 "Material Delivery, Storage and Containment" on of Section D.2.2 of this appendix and *SPPM* Activity Sheets A-8, A-11, A-12, A-16, A-17, A-22, A-29, A-38, and A-41.

2. Cover, containment, and protection from vandalism shall be provided for all chemicals, liquid products, petroleum products, and non-inert wastes present on the site (see Chapter 173-304 WAC for the definition of inert waste). Onsite fueling tanks shall include secondary containment. See BMP D.2.2.4 "Material Delivery, Storage and Containment" in Section D.2.2 of this appendix and *SPPM* Activity Sheets A-2, A-3, A-4, A-6, A-8, and A-9.

3. Maintenance and repair of heavy equipment and vehicles involving oil changes, hydraulic system drain down, solvent and de-greasing cleaning operations, fuel tank drain down and removal, and other activities which may result in discharge or spillage of pollutants to the ground or into stormwater runoff must be conducted using spill prevention measures, such as drip pans. Contaminated surfaces shall be cleaned immediately following any discharge or spill incident. Emergency repairs may be performed onsite using temporary plastic placed beneath and, if raining, over the vehicle. See BMP D.2.2.4 "Material Delivery, Storage and Containment" in Section D.2.2 of this appendix and *SPPM* Activity Sheets A-13, A-17, A-18 and A-48.

4. Application of agricultural chemicals, including fertilizers and pesticides, shall be conducted in a manner and at application rates that will not result in loss of chemical to stormwater runoff. Manufacturers' recommendations for application rates and procedures shall be followed. See *SPPM* Activity Sheets A-5, A-25, and A-26.

5. Stormwater discharges shall not cause or contribute to a violation of the water quality standard for pH in the receiving water. Measures shall be used to prevent or treat contamination of stormwater runoff by pH modifying sources. These sources include, but are not limited to:

   - Bulk cement (see *SPPM* Activity Sheets A-19, and BMPs D.2.2.1 "Concrete Handling" and D.2.2.4 "Material Delivery, Storage and Containment" in this appendix)
   - Cement kiln dust, fly ash (see *SPPM* Activity Sheet A-19, and BMPs D.2.2.1 "Concrete Handling" and D.2.2.9 "Use of High pH Soil Amendments on Construction Sites" in this appendix)
   - New concrete washing and curing waters (see BMPs D.2.2.5 through D.2.2.8 in this appendix for high pH treatment and wastewater disposal requirements)
   - Waste streams generated from concrete grinding and sawing (see *SPPM* Activity Sheets A-19, A-29, A-44, and BMP D.2.2.3 "Sawcutting and Surfacing Pollution Prevention" in this appendix)
   - Exposed aggregate processes, and concrete pumping and mixer washout waters (see *SPPM* Activity Sheets A-19, A-44 and BMPs D.2.2.2 "Concrete Washout Area" and D.2.2.1 "Concrete Handling")

   Also see Section D.2.1 of this appendix for ESC measures that will assist in containment of high pH runoff.

DRAFT

6. For full compliance with RMC 4-6-030 Drainage (Surface Water) Standards, the project may need to include measures for the permanent structures and features constructed under other permits. See the *SPPM* for Activity Sheets describing issues and measures to address them. Common issues include:
   - Containment area planning for storage of liquid materials in stationary or portable tanks, storage of solid waste and food wastes including cooking grease, and to avoid pollutant spills to surface waters. See *SPPM* Activity Sheets A-2, A-3, A-7, and A-8.
   - Permanent canopy and paving requirements for permanent outdoor vehicle parking, maintenance and storage areas, and manufacturing or processing associated with metal products. See *SPPM* BMP Information Sheets #3 and #4 and Activity Sheets A-21 and A-31.

D.3.6 SMALL SITE CSWPP SUBMITTAL REQUIREMENTS

A *Small Site CSWPP Plan* must be submitted for all projects that are eligible to use the Small Site CSWPP requirements in this section. For projects in Simplified Drainage Review that disturb soil on less than 1 acre of land, this plan is part of the Simplified Drainage Plan described in the *Simplified Drainage Requirements* (Appendix C of the *SWDM*). For other projects, including those that may not be subject to drainage review, this plan would be submitted as directed by CED. Directions for preparing a Small Site CSWPP Plan are provided below, and a sample plan is presented in Section D.3.6.3.

D.3.6.1 SMALL SITE CSWPP PLAN MAP

The Small Site CSWPP Plan includes information that is routinely collected for a **single family residence site plan or a short plat plot plan** already required to be submitted with a permit application. One copy of the site plan or plot plan shall be used to show how ESC and SWPPS measures are to be applied to the site to comply with the Small Site CSWPP requirements. The approximate location and size of clearing limits, rock construction entrance, flow paths, silt fences, etc., should be indicated on the Small Site CSWPP Plan. Any plan must contain at a minimum the features listed in Section D.3.6.2.

Single family residential projects that qualify for Small Site CSWPP requirements should use the Residential Site Plan (see CED Bulletin No. 9, "Obtaining a Residential Building Permit") as the base map for the CSWPP plan.

Proposed short plats that qualify for Simplified Drainage Review should use the Simplified Drainage Plan (see *Simplified Drainage Requirements*, Appendix C of the *SWDM*) as a base plan for the CSWPP plan. All projects subject to Simplified Drainage Review are required to submit these plans and a drainage assessment. If engineering plans are required for a short plat application, they may be used as a base plan for Small Site CSWPP plans. How the ESC and SWPPS measures are to be applied on the site are added directly to the base map. For more complicated sites, an erosion control professional should be readily able to add Small Site CSWPP BMPs to the base map with minimal additional effort or expense.

The CSWPP plans for short plats usually apply only to the site development, since siting of homes on lots created by short plats is done after the short plat is approved (when the home applies for a residential building permit). It is the responsibility of the applicant for a proposed single family residence to show in detail how ESC and SWPPS requirements are met. The applicant is also required to comply with the King County *SPPM* and RMC 4-6-030.

D.3.6.2 FEATURES REQUIRED ON SMALL SITE CSWPP PLANS

The Small Site CSWPP Plan should be drawn on 8-1/2″ x 11″, 8-1/2″ x 14″, or 11″ x 17″ paper (see the sample plan in Figure D.3.6.A), and must include the following information.

Identification

1. Name, address, and phone number of the applicant
2. Scale—use a scale that clearly illustrates drainage features and flow controls (1″ = 20′ is standard engineering scale; minimum acceptable scale is 1″ = 50′)

3. Parcel number
4. North arrow
5. Dimension of all property lines, easements, and building setback lines
6. Street names and existing or proposed property address
7. Section, township, and range of proposal.

Topography

1. Corner elevations
2. Benchmark (a permanent mark indicating elevation and serving as a reference in the topographic survey)
3. Datum (assumed datum is acceptable in many cases, i.e., fire hydrant base = 100′; datum for projects in or near FEMA floodplains should be NGVD 1929 or NAVD 1988 per the appropriate FEMA flood mapping, as directed by the local authority)
4. If over 15% slope: 5foot contours, top of slope, toe of slope, and any erosion or landslide areas.

Proposed ESC

1. Delineation of proposed clearing limits
2. Type and location of erosion control facilities
3. Location of any significant offsite drainage features within 200 feet of the discharge point(s) for the lot, including streams, lakes, roadside ditches.

Proposed SWPPS

1. Areas of designated contractor and equipment parking, fueling and equipment maintenance
2. Type and location of spill control, materials containment and concrete handling/washout facilities
3. Notes referencing BMPs in this appendix and/or in the *SPPM*.

Topography/Drainage Features

1. Outline of any stream, wetland, lake, closed depression, or other water feature (including any required buffer width)
2. Location of all steep slopes, landslide hazard areas, and coal mine hazard areas (including buffers)
3. Location of all existing and proposed drainage easements, ditches, swales, pipes, etc.
4. Location of all critical areas as shown on any recorded critical areas notice on title.

D.3.6.3 SAMPLE SMALL SITE CSWPP PLAN

Proposed ESC. All sites are required to control erosion and contain sediment. The planning and use of ESC measures will be illustrated for a single family residence. Although the specifics of any lot will differ from those shown here, the process will be similar. The first step in the process is to determine whether the site is eligible to use the Small Site ESC requirements. This evaluation and the following materials are usually included in the drainage assessment that accompanies the Small Site ESC Plan.

The proposed house is to be placed on an existing 1.69-acre lot (see Figure D.3.6.A). Impervious surfaces are the roof, a driveway, and a parking area. The total proposed impervious surface is 6,950 square feet as determined from the residential site plan layout of residence and driveway (the site plan provides the base map for the Small Site CSWPP Plan). The amount exceeds 2,000 square feet but falls below the 10,000-square-foot limit for Simplified Drainage Review. Therefore, a Small Site CSWPP Plan is applicable.

DRAFT

The proposal is not in a basin plan area or critical drainage area that might contain clearing limits. However, a portion of a wetland and an erosion hazard area have been identified on the site, and their approximate locations are shown in Figure D.3.6.A. While neither the wetland and its buffer, nor the erosion hazard area would be disturbed during construction, the locations of these critical areas must be verified.

Approximately the southern 2/3 of the site will be cleared. Trees and other native vegetation will be left intact along the northern edge, near the street. Buffers will be maintained around the wetland and erosion hazard areas, respectively. The site slopes towards the street.

In order to prevent erosion and to encourage sedimentation, the following ESC **BMPs** are used:

1. **Clearing will be minimized** to the extent possible, and **clearing limits will be marked** by fencing or other means on the ground.
2. Water will be **routed** around the erosion hazard area and around the steep section of the driveway by constructing an interceptor dike or ditch that will intersect and direct water away to the east of the site.
3. Water will be **filtered** before it reaches the wetland. Silt fencing or other perimeter protection will be placed along slope contours at the limits of clearing in the vicinity of both the wetland and the erosion hazard area.
4. A rocked construction entrance will be placed at the end of the driveway.
5. **Mulch** will be spread over all cleared areas of the site when they are not being worked. Mulch will consist of air-dried straw and chipped site vegetation. Other cover methods that prevent erosion may also be installed.

The BMPs shown in Figure D.3.6.A must be installed as clearing progresses. For example, the rock construction entrance must be installed as soon as the path for the driveway has been cleared. Additional ESC measures must be installed if the ones proposed above prove insufficient.

Proposed SWPPS. Although the footprints of the proposed house and driveway are not shown in this example, the project description suggests typical house building materials and concrete foundation/driveway construction. In order to prevent pollutants from entering water resources and groundwater, the following SWPPS **BMPs** would be used:

1. Designated parking for contractors and spill containment if equipment will be left onsite (reference *SPPM* Activity Sheet A-31 on the Small Site CSWPP plan).
2. Concrete handling/washout containment area (indicate location) and description/detail (reference BMPs D.2.2.1 “Concrete Handling” and D.2.2.2 “Concrete Washout Area” from this appendix on the Small Site CSWPP plan).

DRAFT

FIGURE D.3.6.A SAMPLE SMALL SITE CSWPP PLAN

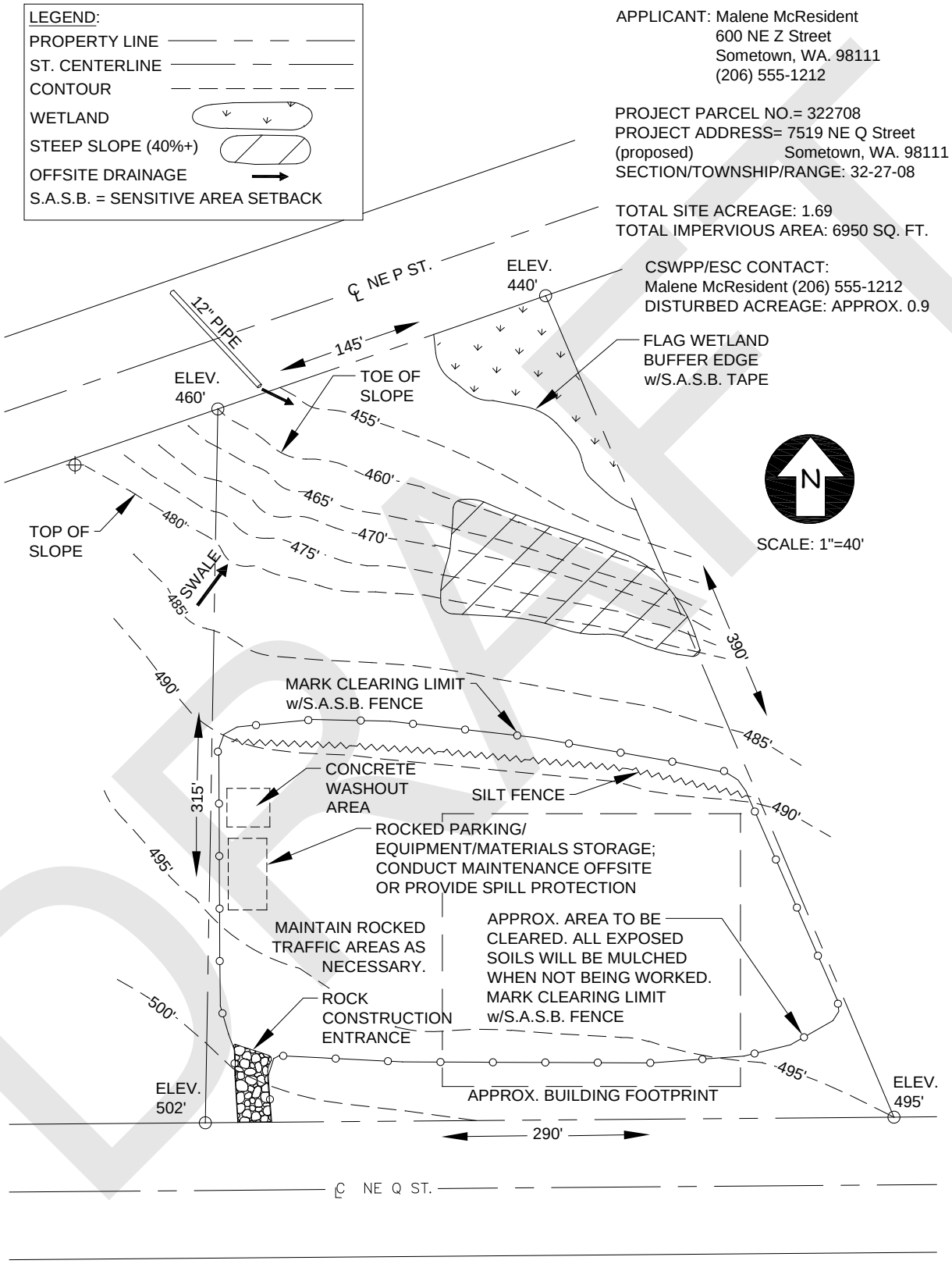

DRAFT

(This page intentionally left blank.)

DRAFT

D.4 REFERENCE SECTION

This reference section provides materials useful in developing erosion and sediment control plans and for effectively implementing erosion control measures in the field.

D.4.1 STANDARD ESC PLAN NOTES

The **standard ESC plan notes** included in Reference Section 7-B must be included on all ESC plans.

D.4.2 RECOMMENDED CONSTRUCTION SEQUENCE

A detailed construction sequence is needed to ensure that erosion and sediment control measures are applied at the appropriate times. A recommended construction sequence is provided in Reference Section 7-B.

DRAFT

D.4.3 ESC AND SWPPS MAINTENANCE REPORTS

CED may require a written record of all maintenance activities to be kept to demonstrate compliance with the Maintenance Requirements (Section D.2.4.4). A standard ESC Maintenance Report is provided on the next page and typical SWPPS Maintenance Reports follow. Copies of the ESC and SWPPS Maintenance Reports must be kept on site throughout the duration of construction.

ESC MAINTENANCE REPORT

Performed By: _____
Date: _____
Project Name: _____
CED Permit #: _____

Clearing Limits

Damage	OK_____	Problem_____
Visible	OK_____	Problem_____
Intrusions	OK_____	Problem_____
Other	OK_____	Problem_____

Mulch

Rills/Gullies	OK_____	Problem_____
Thickness	OK_____	Problem_____
Other	OK_____	Problem_____

Nets/Blankets

Rills/Gullies	OK_____	Problem_____
Ground Contact	OK_____	Problem_____
Other	OK_____	Problem_____

Plastic

Tears/Gaps	OK_____	Problem_____
Other	OK_____	Problem_____

Seeding

Percent Cover	OK_____	Problem_____
Rills/Gullies	OK_____	Problem_____
Mulch	OK_____	Problem_____
Other	OK_____	Problem_____

Sodding

Grass Health	OK_____	Problem_____
Rills/Gullies	OK_____	Problem_____
Other	OK_____	Problem_____

Perimeter Protection Including Silt Fence

Damage	OK_____	Problem_____
Sediment Build-up	OK_____	Problem_____
Concentrated Flow	OK_____	Problem_____
Other	OK_____	Problem_____

BMP/Facility Protection

Damage	OK_____	Problem_____
Sedimentation	OK_____	Problem_____
Concentrated Flow	OK_____	Problem_____
Rills/Gullies	OK_____	Problem_____
Intrusions	OK_____	Problem_____
Other	OK_____	Problem_____

Brush Barrier

Damage	OK_____	Problem_____
Sediment Build-up	OK_____	Problem_____
Concentrated Flow	OK_____	Problem_____
Other	OK_____	Problem_____

DRAFT

Vegetated Strip

Damage OK_____ Problem_____
Sediment Build-up OK_____ Problem_____
Concentrated Flow OK_____ Problem_____
Other OK_____ Problem_____

Construction Entrance

Dimensions OK_____ Problem_____
Sediment Tracking OK_____ Problem_____
Vehicle Avoidance OK_____ Problem_____
Other OK_____ Problem_____

Wheel Wash

Dimensions OK_____ Problem_____
Sed buildup or tracking OK_____. Problem_____
Other OK_____ Problem_____

Construction Road

Stable Driving Surf. OK_____ Problem_____
Vehicle Avoidance OK_____ Problem_____
Other OK_____ Problem_____

Sediment Trap/Pond

Sed. Accumulation OK_____ Problem_____
Overtopping OK_____ Problem_____
Inlet/Outlet Erosion OK_____ Problem_____
Other OK_____ Problem_____

Catch Basin/Inlet Protection

Sed. Accumulation OK_____ Problem_____
Damage OK_____ Problem_____
Clogged Filter OK_____ Problem_____
Other OK_____ Problem_____

Interceptor Dike/Swale

Damage OK_____ Problem_____
Sed. Accumulation OK_____ Problem_____
Overtopping OK_____ Problem_____
Other OK_____ Problem_____

Pipe Slope Drain

Damage OK_____ Problem_____
Inlet/Outlet OK_____ Problem_____
Secure Fittings OK_____ Problem_____
Other OK_____ Problem_____

Ditches

Damage OK_____ Problem_____
Sed. Accumulation OK_____ Problem_____
Overtopping OK_____ Problem_____
Other OK_____ Problem_____

Outlet Protection

Scour OK_____ Problem_____
Other OK_____ Problem_____

Level Spreader

Damage OK_____ Problem_____
Concentrated Flow OK_____ Problem_____
Rills/Gullies OK_____ Problem_____
Sed. Accumulation OK_____ Problem_____
Other OK_____ Problem_____

Dewatering Controls

Sediment OK_____ Problem_____

Dust Control

Palliative applied OK_____ Problem_____

Miscellaneous

Wet Season Stockpile OK_____ Problem_____
Other OK_____ Problem_____

DRAFT

Comments:

Actions Taken:

Problems Unresolved:

DRAFT

Pollution Prevention Team	**Completed by:** _____ **Title:** _____ **Date:** _____
Responsible Official:_____ Team Leader:_____ Responsibilities: _____ _____ _____	Title: _____ Office Phone:_____ Cell Phone #: _____
(1)_____ Responsibilities: _____ _____ _____	Title:_____ Office Phone: _____ Cell Phone #: _____
(2)_____ Responsibilities: _____ _____ _____	Title:_____ Office Phone: _____ Cell Phone #: _____

DRAFT

Employee Training		Completed by:_____ Title:_____ Date:_____	
Describe the annual training of employees on the SWPPP, addressing spill response, good housekeeping, and material management practices.			
Training Topics **1.) LINE WORKERS**	**Brief Description of Training Program/Materials (e.g., film, newsletter course)**	**Schedule for Training (list dates)**	**Attendees**
Spill Prevention and Response			
Good Housekeeping			
Material Management Practices			
2.) P2 TEAM:			
SWPPP Implementation			
Monitoring Procedures			

DRAFT

List of Significant Spills and Leaks	Completed by:_____ Title:_____ Date:_____

List all spills and leaks of toxic or hazardous pollutants that were significant but are not limited to, release of oil or hazardous substances in excess of reportable quantities. Although not required, we suggest you list spills and leaks of non-hazardous materials.

Date (month/day/ year)	Location (as indicated on site map)	Description				Response Procedure		Preventive Measure Taken
		Type of Material	Quantity	Source, If Known	Reason for Spill/Leak	Amount of Material Recovered	Material No longer exposed to Stormwater (Yes/No)	

DRAFT

Potential Pollutant Source Identification	Completed by:_____ Title:_____ Date:_____

List all potential stormwater pollutants from materials handled, treated, or stored onsite.

Potential Stormwater Pollutant	Stormwater Pollutant Source	Likelihood of pollutant being present in your stormwater discharge. If yes, explain

DRAFT

Material Inventory	Completed by:_____ Title:_____ Date:_____

List materials handled, treated, stored, or disposed of at the project site that may potentially be exposed to precipitation or runoff.

Material	Purpose/Location	Quantity (Units)				Likelihood of contact with stormwater If Yes, describe reason		Past Spill or Leak	
		Used	Produced	Stored				Yes	No
		(indicate per week or year)							

DRAFT

(This page intentionally left blank)

DRAFT